0258820

Technical Manual

SERIES 411

MP MASTER
MA29391

Scientific Atlanta

Technical Manual

SERIES 411

MAINFRAME

POWER SUPPLY

DOWNCONVERTER

IF FILTER

IF FILTER

MESSAGE DEMOD

THRESH EXT. UNIT

BASEBAND AMPLIFIER

ALARM UNITS

Scientific-Atlanta, Inc.

United States: Box 105027, Atlanta, Georgia 30348; Telephone 404-925-5000; TWX 810-766-4912; Telex 0542898
Canada: 1640 Bonhill Road, Unit 6, Mississauga, Ontario L5T 1C8, Canada; Telephone 416-677-6555; Telex 06983600
Europe: Horton Manor, Stanwell Road, Horton, Slough SL3 9PA, England; Telephone Colnbrook (02812) 3211; Telex 849406

Printed in the U.S.A. Scientific-Atlanta, Inc. 1985

F1083-01

IMPORTANT NOTE

The information behind this tabbed divider may apply to more than one item. Check all pages carefully.

IMPORTANT NOTE

The information behind this tabbed divider may apply to more than one item. Check all pages carefully.

33R060Z

Technical Manual

SERIES 411WB( )
RECEIVER
PART NO. 129106

Data, drawings, and other material contained herein are proprietary to Scientific-Atlanta, Inc., and may not be reproduced or duplicated in any form without the prior permission of Scientific-Atlanta, Inc.

When ordering parts from Scientific-Atlanta, Inc., be sure to include the equipment model number, equipment serial number, and a description of the part.

In all correspondence with Scientific-Atlanta, Inc., regarding this publication, please refer to

33R061C

First Edition - August 1974, Revised - April 1976, Revised - May 1978, Revised - September 1980

Latest Revision - March 1981

Additional copies available at $100.00 (complete set)

Scientific-Atlanta, Inc.

United States: 3845 Pleasantdale Road, Atlanta, Georgia 30340; Telephone 404-449-2000; TWX 810-766-4912; Telex 0542898
Canada: 1640 Bonhill Road, Unit 6, Mississauga, Ontario L5T 1C8, Canada; Telephone 416-677-6555; Telex 06983600
Europe: Horton Manor, Stanwell Road, Horton, Slough SL3 9PA, England
Telephone Colnbrook (02812) 3211; Telex 849406 SCIATLA G

Digitized by the Internet Archive
in 2024

https://archive.org/details/manualsplus_02263

TABLE OF CONTENTS

Paragraph			Page
	SECTION 1 GENERAL INFORMATION		
1.1	GENERAL		1-1
1.2	PURPOSE OF EQUIPMENT		1-1
1.3	GENERAL DESCRIPTION		1-2
	1.3.1	Downconversion Only - Configuration A	1-4
	1.3.2	Video and Subcarrier Audio Configuration B	1-7
	1.3.3	Video and Subcarrier Audio Configuration C	1-11
	1.3.4	INTELSAT - Compatible Video Receiver Configuration D	1-11
	1.3.5	Threshold Extension Message Receiver Configuration E	1-15
	1.3.6	Message Receiver Without Threshold Extension, Configuration F	1-16
1.4	EQUIPMENT SUPPLIED AND TEST DATA		1-16
1.5	ORDERING INFORMATION		1-19
	SECTION 2 INSTALLATION		
2.1	GENERAL		2-1
2.2	UNPACKING AND INSPECTION		2-1
2.3	INSTALLATION		2-1
2.4	INPUT/OUTPUT CONNECTIONS		2-3

Paragraph			Page
	SECTION 3 OPERATION		
3.1	GENERAL		3-1
3.2	MAINFRAME CONTROLS AND INDICATORS		3-1
3.3	OPERATION		3-3
	3.3.1	Power Turn-On/Turn-Off	3-3
	3.3.2	Front-Panel Meter and Switch	3-3
	3.3.3	Receiver Preliminary Settings	3-3
	3.3.4	Video Receiver Baseband Level Setting	3-5
	3.3.5	Message Receiver Baseband Level Setting	3-11
	3.3.6	Audio Level Setting	3-15
	3.3.7	Level Setting of Modules in Auxiliary Chassis	3-15
	SECTION 4 DETAILED DESCRIPTION		
4.1	GENERAL		4-1
4.2	UNIT CONSTRUCTION		4-1
4.3	ELECTRICAL DESCRIPTION		4-2
	SECTION 5 MAINTENANCE		
5.1	GENERAL		5-1
5.2	PREVENTIVE MAINTENANCE		5-1
5.3	TROUBLESHOOTING AND REPAIR		5-2
	5.3.1	Troubleshooting	5-2
	5.3.2	Obtaining Replacement Parts	5-3

Paragraph			Page
	5.3.3	Soldering Techniques	5-4
	5.3.4	Component Replacement on Circuit Boards	5-5
	5.3.5	Power Transistor Replacement	5-6
5.4	PERFORMANCE TEST PROCEDURES		5-6
	5.4.1	Individual Modules	5-6
	5.4.2	Overall Receiver	5-7

SECTION 6
REPLACEMENT PARTS LISTS

6.1	GENERAL	6-1
6.2	EXPLANATION OF COLUMN HEADINGS	6-1
6.3	ORDERING PARTS	6-2
6.4	RECOMMENDED SPARE PARTS	6-2

SECTION 7
DRAWINGS

7.1	GENERAL	7-1

Note

Section 8 and above describe the plug-in modules that are installed in a particular receiver. Look behind the appropriate tabbed divider for a complete description of the desired module.

LIST OF ILLUSTRATIONS

Figure	Title	Page
1-1	Series 411WB() Receiver	1-2
1-2	Model 411WB Receiver Configuration A	1-5
1-3	Model 411WB Receiver Configuration B	1-8
1-4	Model 411WB Receiver Configuration C	1-12
1-5	Model 411WB Receiver Configuration D	1-13
1-6	Model 411WB Receiver Configuration E	1-17
1-7	Model 411WB Receiver Configuration F	1-18
2-1	Receiver Dimensions	2-2
2-2	Receiver Rear-Panel Connectors	2-3
3-1	Series 411 WB Receiver Mainframe Controls and Indicators	3-1
3-2	Test Tone Method of Level Adjustment	3-6
3-3	Equipment Set-Up Required for Baseband Level Setting of Message Receivers	3-16
4-1	Signal Flow Through Models 411WB Receivers	4-3
4-2	Receiver Gain/Level Distribution	4-5
7-1	Series 411WB ( ) - ( ) - ( ) Receiver Mainframe	7-3
7-2	Mainframe Model 411 WB (D) Schematic Diagram	7-5

LIST OF TABLES

Table	Title	Page
1-1	Typical Receiver Configurations	1-3
1-2	Technical Characteristics, Model 411WB Receiver, Configuration A	1-4
1-3	Technical Characteristics, Model 411WB Receiver, Configuration B	1-9
1-4	Technical Characteristics, Model 411WB Receiver Configuration D	1-14
1-5	Technical Characteristics, Model 411WB Receiver Configuration E	1-15
2-1	Receiver Rear-Panel Cable Connections	2-4
2-2	Remote Frequency Option Connector	2-13
2-3	Receiver Rear Panel Cable Connections (Remote Interface)	2-14
3-1	Receiver Mainframe Controls and Indicators	3-2
3-2	Deviation Information	3-7
3-3	Maximum Levels into the Receiver	3-13
3-4	Global-Beam INTELSAT IV Module Requirements (Standard and Expanded)	3-17
3-5	Transmission and Setup Parameters	3-18

SECTION 1
GENERAL INFORMATION

1.1 GENERAL

This instruction manual contains information for the installation, operation, and maintenance of the Scientific-Atlanta Series 411 WB( ) Receiver. Complete replacement parts lists and schematic diagrams are also included.

The manual is divided into two major parts. The first part consists of sections 1 through 7, which deal with the overall receiver description, installation, operation, troubleshooting on the module level, and a list of mainframe replacement parts. Section 7 contains schematic diagrams of the receiver mainframe.

The second part of the manual consists of section 8 and the remaining sections, which contain detailed information on each of the plug-in modules in the receiver mainframe. Each of these modules has been assigned a section number, and all information for that module is complete within that section. For example, a technical description, maintenance procedures, parts-location illustrations, replacement parts list, and complete schematic diagrams of the receiver power supply are contained in section 8.

Several sections may appear to be missing in your receiver manual. These sections apply to modules that are not contained in your receiver. If, in the future, you order these modules, the correct manual section will be included and can be inserted in this receiver manual.

1.2 PURPOSE OF EQUIPMENT

The Series 411 WB( ) Receiver is specifically designed for use in domestic and international earth stations for the reception from satellites of frequency-modulated signals at microwave frequencies of 3.7 to 4.2 GHz.

1.3 GENERAL DESCRIPTION

The entire receiver is of modular construction and is completely contained in one 5-1/4-inch high rack-mounted unit. The power supply, IF filter, IF amplifier, demodulators, baseband-processing circuits, etc., are slide-in units that plug into slots in the receiver main frame (see figure 1-1). The downconverter is bolted into the mainframe with four screws and is easily removed. A special test slot and rear-panel connectors on the mainframe permit the testing of a module in the receiver, using the receiver dc power supplies. A front-panel meter and selector switch allow rapid checking of all receiver operating voltages and significant signal levels for trouble-shooting and fault-isolation.

Several basic configurations of receiver are available. These configurations are identified in table 1-1. Within each of these configurations there are several options that are available. These options, in the form of plug-in modules that perform one or more specific functions, and the configurations in which they are used are described in the following paragraphs.

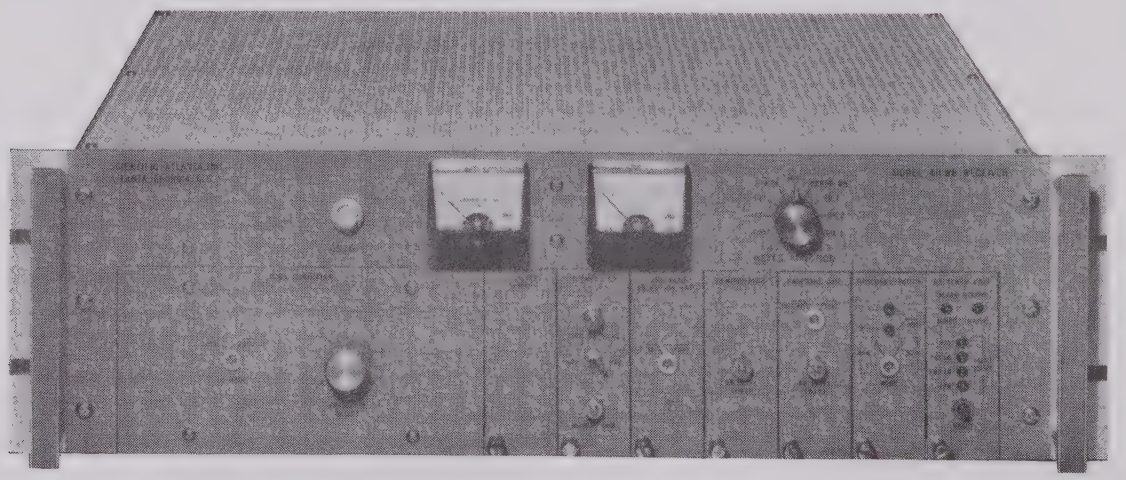

P6499

Figure 1-1. Series 411 WB ( ) Receiver

TABLE 1-1. TYPICAL RECEIVER CONFIGURATIONS. See also paragraph 1.3 for descriptions of the required and optional modules within each of these configurations.

Configuration Reference Letter	Description	Pages of Detailed Description
A	Downconversion only is performed by the receiver. Signal processing beyond IF is not provided.	1-4 through 1-7 2-4, 4-3
B	Video receiver with subcarrier audio demodulation.	1-7 through 1-11 2-5, 2-6, 4-3
C	Video receiver with subcarrier audio demodulation with a dual width video clamp. The audio subcarrier demodulator goes in a separate main frame.	1-11, 1-12 2-6.2-7 4-3
D	Intelsat - compatible video receiver.	1-11 through 1-14 2-7 through 2-9 4-3
E	Threshold extension message receiver.	1-15 through 1-17 2-9, 2-10, 4-4
F	Message receiver with no threshold extension (12-1872 channels)	1-16, 1-18 2-10 through 2-12 4-4

1.3.1 Downconversion Only - Configuration A

Configuration A of the Series 411 Receiver is intended for use in wideband communication systems to convert any video or message carrier signal within the 3.7 to 4.2 GHz frequency band to an intermediate frequency (IF) of 70 MHz. Carrier selection is made with the first local-oscillator frequency only, with all filters remaining fixed-tuned. This frequency-agility feature makes it possible for each receiver to tune rapidly to any frequency in the band.

Frequency selection may be accomplished using internal crystal oscillators (one is standard, up to 12 can be accommodated), using an internal frequency synthesizer which allows any frequency in the 3.7 to 4.2 GHz range to be selected in 250 kHz steps, or an external reference signal.

Two plug-in modules are available with this configuration as options. They are an IF filter and an IF amplifier, and occupy the first two slots in the receiver mainframe as shown in figure 1-2. With or without the options installed, output from the receiver is a 70-MHz IF signal suitable for processing by external equipment. If the IF amplifier is installed, the output level is increased as much as 40 dB; amplifier gain can be AGC'd or manually controlled. Refer to table 1-2 for detailed specifications.

TABLE 1-2. TECHNICAL CHARACTERISTICS, MODEL 411WB RECEIVER, CONFIGURATION A

Characteristic	Specification
Input	
Frequency	3700 to 4200 MHz
Level (Receivers)	
Maximum	$-49 + 10 \text{ LOG } (B_{IF})$ dBm
Minimum	$-89 + C/N + \text{LOG } (B_{IF})$ dBm

STANDARD MODULES

1. DOWNCONVERTER
2. BLANK
3. BLANK
4. BLANK
5. BLANK
6. BLANK
7. BLANK
8. BLANK

OPTIONAL MODULES

2. IF FILTER
3. IF AMPLIFIER

DOWNCONVERSION ONLY
70-MHz OUTPUT

Figure 1-2. Model 411WB Receiver, Configuration A

TABLE 1-2. TECHNICAL CHARACTERISTICS, MODEL 411WB RECEIVER, CONFIGURATION A - continued

Characteristic	Specification
Level (Downconverter Only)	
Maximum	-20 dBm max
Impedance	50 ohms
Return Loss	23 dB
Noise Figure	14 dB maximum, 12 dB typical
Output	
Frequency	70 MHz ±20 MHz
Level	-5 dBm nominal (adjustable 0 to -10 dBm in AGC mode)
Impedance	75 ohms (unbalanced)
Return Loss	Greater than 23 dB from 50 MHz to 90 MHz
Image Attenuation	80 dB minimum
Local Oscillator Leakage	-80 dBm maximum at RF input
RF-IF Gain	
With IF Amp	60 dB maximum, 20 dB minimum
Downconverter Only	20 dB nominal
Gain Control	
AGC Mode	40-dB range, minimum
Manual Mode	40-dB range
Gain Response	±0.25 dB, f_o ±18 MHz
IF Bandwidth	40 MHz, minimum
Delay Distortion	
Linear	Less than ±0.03 ns/MHz, f_o ±18 MHz
Parabolic	Less than 0.01 ns/MHz^2, f_o ±18 MHz
Ripple	Less than 1.0 ns peak-to-peak, f_o ±18 MHz
Third-Order Distortion	Greater than 50 dB below the desired carrier level when driven by two equal carriers at the RF input at -30 dBm each
Spurious Responses	65 dB below desired signal

TABLE 1-2. TECHNICAL CHARACTERISTICS,
MODEL 411WB RECEIVER, CONFIGURATION A - continued

Characteristic	Specification
Local Oscillators	
Standard	
Frequencies	12 switchable
Stability	1 part in 10^6/day (25° C) 2 part in 10^7/° C (0-50° C)
Optional	
Frequencies	1 to 12 as specified
Stability	±200 Hz/day (15-35° C)
Frequency Synthesizer	3700-4200 MHz in 0.25-MHz steps
Size	See figure 2-1
Weight	40 lb
Power Consumption	105-125V ac, 47-63 Hz or 210-250V ac, 47-63 Hz, 150 watts

1.3.2 Video and Subcarrier Audio Configuration B

This receiver uses the same downconversion assembly as configuration A, and is equipped with a 36-MHz IF filter and IF AGC amplifier. In addition, the receiver contains video and audio demodulators. After downconversion to 70 MHz, the carrier is filtered, amplified, and demodulated by an FM discriminator capable of handling transmission bandwidths of ±18 MHz. Baseband-processing units provide facilities to de-emphasize and remove the energy-dispersal waveform from the demodulated baseband signals. A subcarrier demodulator provides the audio program channel.

The IF filter and IF amplifier are the same plug-in modules that are used in configuration A. The demodulator and the baseband circuits are also contained in plug-in modules. Figure 1-3 shows the positions of these modules in the receiver mainframe. Refer to table 1-3 for detailed specifications of the configuration B receiver.

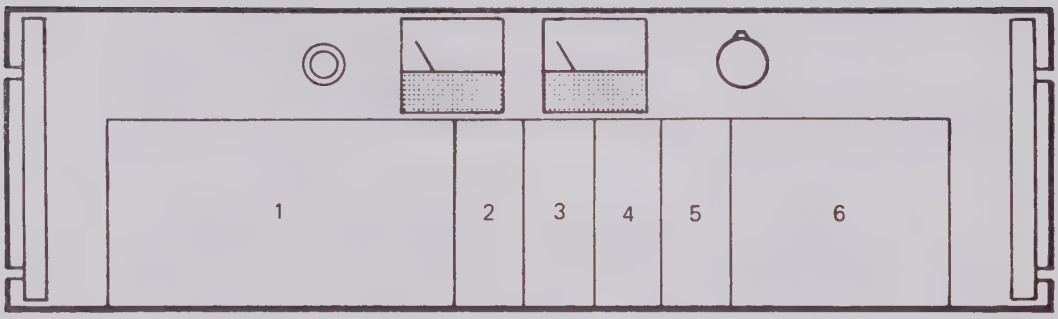

STANDARD MODULES

1. DOWNCONVERTER
2. IF FILTER
3. IF AMPLIFIER
4. WIDEBAND DEMODULATOR
5. VIDEO CLAMP
6. BLANK

OPTIONAL MODULES

6. AUDIO DEMODULATOR

VIDEO AND SUBCARRIER AUDIO

Figure 1-3. Model 411WB Receiver, Configuration B

TABLE 1-3. TECHNICAL CHARACTERISTICS, MODEL 411WB
RECEIVER Configuration B. Specifications for the downconversion and IF portions of this receiver are identical with those of configuration A.

Characteristic	Specification
VIDEO DEMODULATOR	
Type	FM
Transmission Capacity	525 or 625 color video plus audio subcarrier
Input	
Frequency	70 MHz
Bandwidth	36 MHz
Impedance	75 ohms unbalanced
Return Loss	23 dB, 52 to 88 MHz
Level	-5 dBm ±3 dB
Baseband Output (Video plus Audio Subcarrier)	
Frequency	10 Hz to 8.0 MHz, ±0.5 dB
Impedance	75 ohms unbalanced
Return Loss	23 dB
Output Video	
Frequency	10 Hz to 4.25 MHz, ±0.25 dB
Impedance	75 ohms unbalanced
Return Loss	26 dB
Level	1 volt peak-to-peak
Level Adjustment	±3 dB
De-emphasis	525 or 625 line CCIR Rec. 405-1
Polarity	Black-to-white transitions positive-going
Clamping	50 dB for 30-Hz triangular dispersion waveform
Subcarrier Rejection	>30 dB
AUDIO DEMODULATOR (TELESAT COMPATIBLE)	
Input	
Subcarrier Frequency	6.8 MHz
Level	40 mV rms ±10 dB
Impedance	75 ohms

TABLE 1-3. TECHNICAL CHARACTERISTICS,
MODEL 411WB RECEIVER Configuration B - continued

Characteristic	Specification
Output	
Frequency Range	50 Hz to 5 kHz
Frequency Response	Within ±0.5 dB of CCITT rec. J-21 de-emphasis, 100 Hz to 4 kHz. 1.5 dB rolloff: below 50 kHz ±0.25 kHz
Impedance	600 ohms isolated or balanced
Level	+5 dBm nominal, adjustable 0 to +10 dBm (50 kHz rms subcarrier deviation, 1-kHz test tone)
AUDIO DEMODULATOR (10-kHz AUDIO)	
Input	
Subcarrier Frequency	6.8 MHz
Level	30 mV rms
Impedance	75 ohms
Output	
Frequency Range	50 Hz to 10 kHz
Frequency Response	Within ±.3 dB of CCIT rec. J17 de-emphasis, 100 Hz to 10 kHz
Impedance	600 ohms isolated or balanced
Level	+9 dBm nominal, adjustable +3 to +15 dBm (40 kHz rms subcarrier deviation, 1 kHz test tone)
AUDIO DEMODULATOR (15-kHz AUDIO)	
Input	
Subcarrier Frequency	6.8 MHz
Level	40 mV rms
Impedance	75 ohms
Output	
Frequency Range	50 Hz to 15 kHz
Frequency Response	Within ±.5 dB of standard 17 μsec. de-emphasis rec. between 50Hz and 15 kHz

TABLE 1-3. TECHNICAL CHARACTERISTICS,
MODEL 411WB RECEIVER Configuration B - continued

Characteristic	Specification
Impedance	600 ohms isolated or balanced
Level	+5 dBm nominal, adjustable -1 to +11 dBm (40 kHz rms subcarrier deviation, 1 kHz test tone)

1.3.3 Video and Subcarrier Audio Configuration C

This receiver has the same specifications as configuration B with the following differences:

Output Video Frequency Response	10 Hz to f maximum ±0.3 dB
Subcarrier Rejection	40 dB

In addition the video clamp is a double wide module, and the subcarrier demodulator is in an auxiliary chassis (see the Accessories section). Figure 1-4 shows the positions of the plug-in modules in the mainframe. Refer to the video clamp section of the manual to note additional features of this configuration.

1.3.4 Intelsat-Compatible Video Receiver Configuration D

This receiver contains the same downconverter, 30 or 17.5 MHz IF filter, and IF amplifier as configuration A. In addition, video demodulator and video clamp plug-in modules are installed for either 525 line, 625 line or switchable 525/625 line operation. The audio subcarrier demodulator is not available, however.

Figure 1-5 shows the positions of the plug-in modules in the receiver mainframe, and table 1-4 lists detailed specifications for the receiver in configuration D.

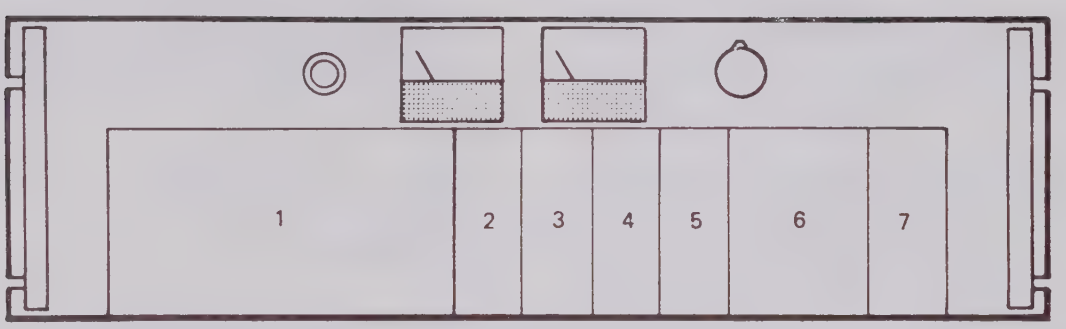

STANDARD MODULES	OPTIONAL MODULES
1. DOWNCONVERTER	7. ALARM UNIT
2. IF FILTER	
3. IF AMPLIFIER	
5. WIDEBAND DEMODULATOR	
6. VIDEO CLAMP	
7. BLANK	

Figure 1-4. Model 411WB Receiver Configuration C

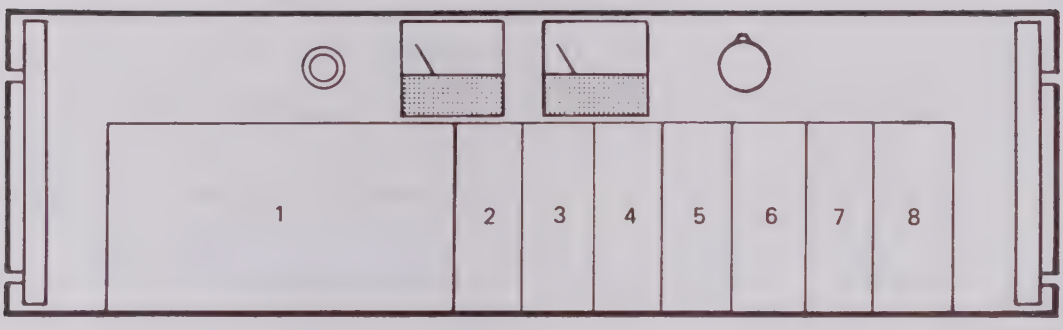

STANDARD MODULES

1. DOWNCONVERTER
2. IF FILTER
3. IF AMPLIFIER
4. WIDEBAND DEMODULATOR
5. VIDEO CLAMP
6. BLANK*
7. BLANK
8. BLANK

OPTIONAL MODULES

5. SWITCHED DE-EMPHASIS
7. BASEBAND SWITCH
8. ALARM UNIT

*VIDEO CLAMP MODULE IS MOVED TO THIS POSITION WHEN OPTIONAL SWITCHED DE-EMPHASIS MODULE IS INSTALLED.

INTELSAT-COMPATIBLE VIDEO

Figure 1-5. Model 411WB Receiver Configuration D

TABLE 1-4. TECHNICAL CHARACTERISTICS, MODEL 411WB RECEIVER Configuration D. Specifications for the downconversion and IF portions of this receiver are identical with those of configuration A.

Characteristic	Specification
Type	FM
Transmission Capacity	525 or 625 line color video
Input	
Frequency	70 MHz
Bandwidth	30 MHz (standard), 17.5 MHz (optional)
Impedance	75 ohms unbalanced
Return loss	23 dB, 55 to 85 MHz
Level	-5 dBm ±3 dB
Output Video	
Frequency	20 Hz to f maximum, ±0.25 dB (525 line)
	20 Hz to 5.5 MHz, ±0.25 dB (625 line)
Impedance	75 ohms unbalanced
Return Loss	26 dB
Level	1 volt peak-to-peak
Level adjustment	136 dB
De-emphasis	525 or 625 line CCIR Rec. 405
Polarity	Black-to-white transitions positive-going
Clamping	50 dB for 30-Hz triangular dispersion waveform
Differential Gain	0.5 dB, 10-90° APL
Differential Phase	1.0°, 10-90° APL
Size	See figure 2-1
Weight and Power	See Configuration A specifications

1.3.5 Threshold Extension Message Receiver Configuration E

This receiver is intended for operation with Intelsat IV transmission parameters for 24- to 432-channel standard global-beam carriers. It may also be used for expanded global-beam carriers up to 432 channels and for spot-beam carriers to 432 channels.

The standard series 411 downconverter is used in this receiver, along with an IF filter of appropriate bandwidth and an IF amplifier plug-in module. Following the IF amplifier are a threshold-extension unit, a message demodulator, and a baseband amplifier. Each of these is a plug-in module that slides into the receiver mainframe.

A carrier-fail alarm or pilot-and-noise monitor plug-in module are available as options to this receiver. In addition, an optional baseband switch that is operated off the alarm circuits is available for redundant switchover.

Figure 1-6 shows the receiver with the various modules installed in the mainframe. Table 1-5 lists detailed specifications for the receiver configuration E.

TABLE 1-5. TECHNICAL CHARACTERISTICS, MODEL 411WB RECEIVER Configuration E. Specifications for the downconversion and IF portions of this receiver are identical with those for configuration A.

Characteristic	Specification
Input	
Frequency	70 MHz
Bandwidth	1.25 to 25 MHz (determined by IF filter)
Level	-5 dBm (nominal)
Impedance	75 ohms, unbalanced
Return Loss	26 dB minimum
Output	
Baseband Response	±0.25 dB, 12-f maximum
Level	-25 dBm (test-tone deviation)
Impedance	75 ohms, unbalanced

TABLE 1-5. TECHNICAL CHARACTERISTICS,
MODEL 411WB RECEIVER, Configuration E - Continued

Characteristic	Specification
Level Adjustment Range	-15 to -40 dBm TT
Return Loss	26 dB minimum
C/T for 8000 pwp	Within 1 dB of theoretical values specified per ICSC-45-135
Idle Noise, Worst Channel	100 pwp >432 ch 250 pwp ≤432 ch
Energy Dispersal Rejection	50 dB minimum
De-emphasis	Per CCIR Rec. 464
Size	See figure 2-1
Weight and Power	See configuration A specifications

1.3.6 Message Receiver Without Threshold Extension, Configuration F

This receiver is essentially identical with configuration E, except that the channel capacity is 12-1872 with no threshold extension unit. This is accomplished by changing the IF filter and de-emphasis circuits. Optional modules available are the same as those for configuration E. Figure 1-7 shows configuration F with the required and optional plug-in modules installed in the receiver mainframe.

1.4 EQUIPMENT SUPPLIED AND TEST DATA

A list of all modules installed in the receiver mainframe is included in the Test Data section of this instruction manual. In addition, copies of the receiver/module test data sheets that were generated during final receiver/module checkout and alignment are in the Test Data section.

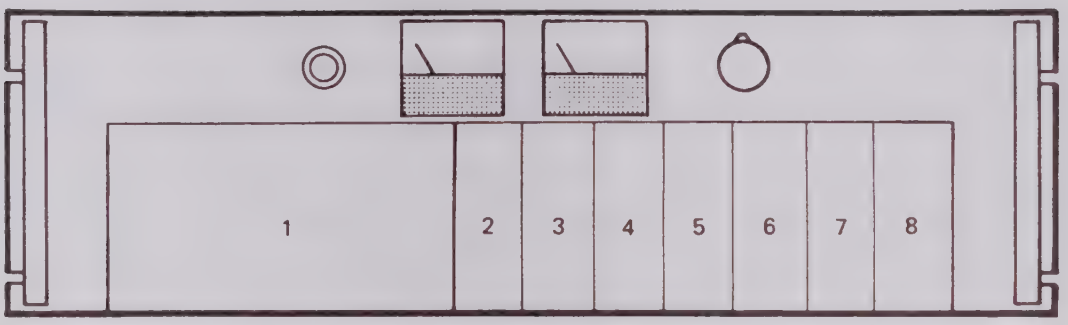

STANDARD MODULES

1. DOWNCONVERTER
2. IF FILTER
3. IF AMPLIFIER
4. THRESHOLD EXTENSION UNIT
5. WIDEBAND DEMODULATOR
6. BASEBAND AMPLIFIER
7. BLANK
8. BLANK

OPTIONAL MODULES

7. BASEBAND SWITCH
   OR
   BASEBAND SPLITTER
8. ALARM UNIT

THRESHOLD EXTENSION MESSAGE

Figure 1-6. Model 411WB Receiver Configuration E

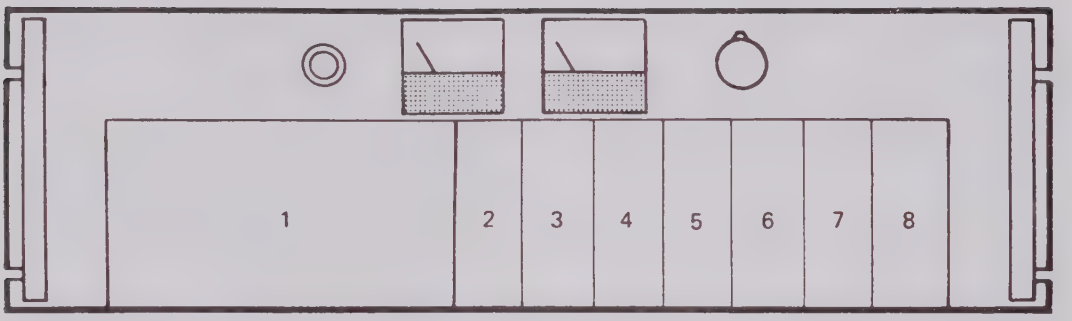

STANDARD MODULES

1. DOWNCONVERTER
2. IF FILTER
3. IF AMPLIFIER
4. BLANK
5. WIDEBAND DEMODULATOR
6. BASEBAND AMPLIFIER
7. BLANK
8. BLANK

OPTIONAL MODULES

7. BASEBAND SWITCH
   OR
   BASEBAND SPLITTER
8. ALARM UNIT

INTELSAT - COMPATIBLE MESSAGE

Figure 1-7. Model 411WB Receiver Configuration F

SECTION 2
INSTALLATION

2.1 GENERAL

Installation of the Series 411 Wideband Receiver will conform to standards designated by the existing conditions and installing agency as to unit location and type of installation. This section contains suggestions and factors to consider before installing the unit. Close adherence to these suggestions and factors will assure a more satisfactory performance from the equipment.

2.2 UNPACKING AND INSPECTION

Exercise caution when unpacking the units. Carefully open the carton and inspect the unit for evidence of shipping damage. If a claim is to be made, save the packing material and shipping carton to substantiate the claim. File the claim with the carrier and notify your Scientific-Atlanta sales representative immediately. Do not return the unit until shipping instructions have been received from the factory. After the units have been removed from the shipping carton, check all packing material for small components that may have been wrapped separately. Compare the items received against the packing list. Replace all packing material in the shipping carton and save the material for future unit storage or reshipment.

2.3 INSTALLATION

The Series 411 WB ( ) Receiver is intended for mounting in a standard 19-inch wide rack and is to be supported by rack slides.

CAUTION

Do not support the receiver by the front panel. Use rack slides.

Three 10-32 captive nuts are installed on each side panel of the receiver for the attachment of rack slides. Nuts A and C are spaced to accept Jonathan Type 110QD-24-2 slides. Dimensions are shown in figure 2-1. Mounting screws must not protrude inside the receiver mainframe case more than 3/8 inch.

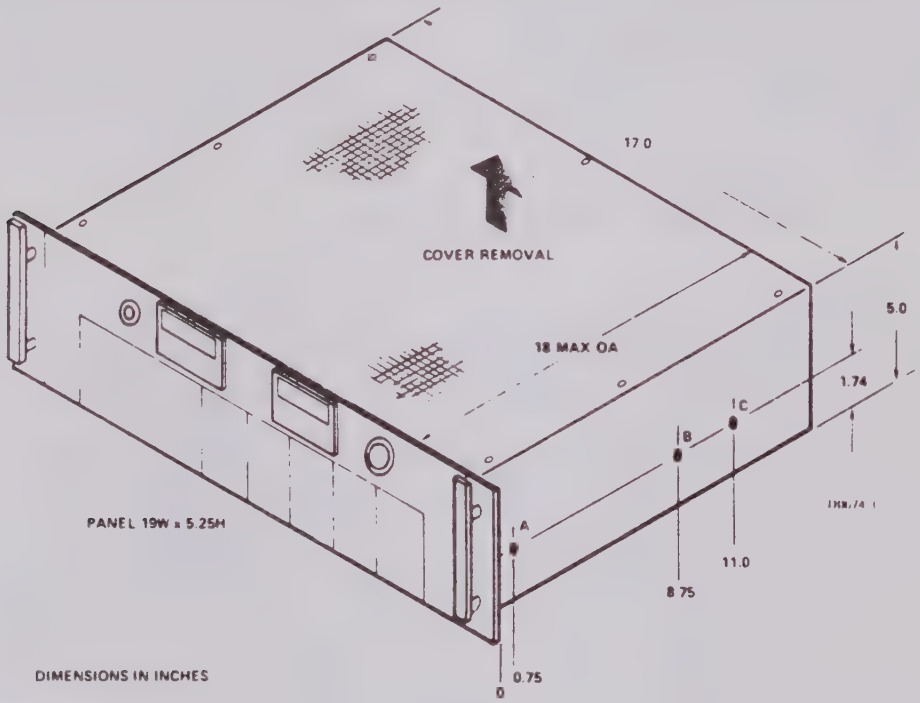

Figure 2-1. Receiver Dimensions

If this receiver is installed in an equipment rack with other receivers, or equipment that generates heat, forced-air cooling should be provided to prevent the buildup of hot air in the receiver. The perforated top cover of the receiver should never be completely obstructed, as through the cover is the only way heat has to exit the receiver chassis. Try to install other items of equipment between receivers if possible to allow the free circulation of air.

If this receiver has been supplied for installation in a rack with other equipment supplied by Scientific-Atlanta, Inc., refer to the Rack section of this instruction manual for important interconnection information.

2.4 INPUT/OUTPUT CONNECTIONS

All input and output connections are made on the rear panel of the receiver. Figure 2-2 shows the connectors on the rear panel. Table 2-1 lists the functions of these connectors for each receiver configuration. Check table 2-1 carefully before making connections to avoid an incorrect connection.

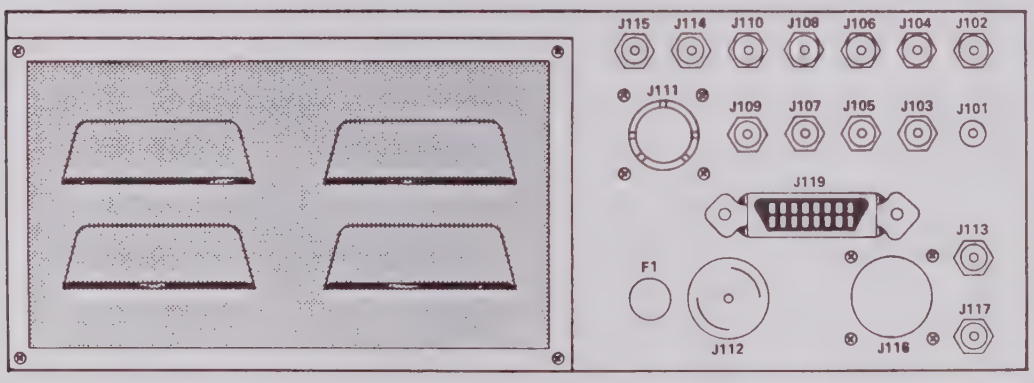

J101	TYPE N FEMALE
J102–J110	BNC FEMALE
J111	BENDIX TYPE PT02A-16-23S
J112	HUBBELL 7486
J116	BNC FEMALE (OPTIONAL) OR BENDIX TYPE PT02A-16-23S (OPTIONAL)
J113–J115	BNC FEMALE
J117	BNC FEMALE
J119	RECT. CONN. 24 - COND.

Figure 2-2. Receiver Rear-Panel Connectors

TABLE 2-1. RECEIVER REAR-PANEL CABLE CONNECTIONS

Connector -Pin	Function
CONFIGURATION A (DOWNCONVERSION ONLY)	
J101	RF in
J102	LO out (patch to J113)
J103	IF Monitor (If IF Amplifier installed)
J104	IF out
J105 thru J110	Not used
J111-A thru -D	Not used
-E	-20V dc
-F	AGC out (if IF Amplifier installed)
-G thru -P	Not used
-R	-24V dc
-S	+24V dc
-T	Not used
-U	Ground
-V	Not used
-W	+12V dc
-X	-12V dc
-Y	Not used
-Z	Not used
J112	115V ac line input
J113	LO in (from J102) or External LO in
J114	Downconverter IF out (patch to J115)
J115	Mainframe IF in
J116	Remote frequency option connector (see table 2-2 for detailed information.
J117	Not used

TABLE 2-1. RECEIVER REAR-PANEL CABLE CONNECTIONS-continued

Connector -Pin	Function
CONFIGURATION B(VIDEC AND SUBCARRIER AUDIO)	
J101	RF in
J102	LO out (patch to J113)
J103	70-MHz IF monitor
J104	Video out
J105	BB out (patch to J108)
J106	Not used
J107	Not used
J108	BB in to Audio Demodulator (or test slot J136-A)
J109	MPX out (or test slot J136-B)
J110	Test slot J136-C
J111-A	Audio out (or test slot J136-H)
-B	Audio out (or test slot J136-J)
-C	Shield for A and B
-D	Spare
-E	-20V dc
-F	AGC out
-G	Not used
-H	Not used
-J	Not used
-K	Not used
-L	Test slot J136-L and J-137-L
-M	Ground
-N	Test slot J136-N
-P	Test slot J136-P
-R	-24V dc
-S	+24V dc
-T	Test slot J136-T
-U	Ground
-V	Test slot J136-V
-W	+12V dc

TABLE 2-1. RECEIVER REAR-PANEL CABLE CONNECTIONS-continued

Connector -Pin	Function
-X	-12V dc
-Y	Spare
-Z	Spare
J113	LO In (from J102) or External LO in
J114	Downconverter IF out (patch to J115)
J115	Mainframe IF in
J116	Remote frequency option connector (see table 2-2 for detailed information)
J117	Not used
	CONFIGURATION C (VIDEO AND SUBCARRIER AUDIO)
J101	RF in
J102	LO out (patch to J113)
J103	70-MHz IF monitor
J104	Not used
J105	Demodulator out (patch to J106)
J106	Video clamp in
J107	BB out (Video and subcarrier)
J108	Video out (or test slot J136-A)
J109	Video out (or test slot J136-B)
J110	Not used (or test slot J136-C)
J111-A	Audio out (or test slot J136-H)
-B	Audio out (or test slot J136-J)
-C	Shld for A and B
-D	Spare
-E	-20V dc
-F	AGC out
-G	Not used
-H	Not used
-J	Not used

TABLE 2-1. RECEIVER REAR-PANEL CABLE CONNECTIONS-Continued

Connector -Pin	Function
-K	Not used
-L	Test slot J136-L and J137-L
-M	Ground
-N	Test slot J136-N
-P	Test slot J136-P
-R	-24V dc
-S	+24V dc
-T	Test slot J136-T
-U	Ground
-V	Test slot J136-V
-W	+12V dc
-X	-12V dc
-Y	Spare
-Z	Spare
J113	LO In (from J102) or External LO in.
J114	Downconverter IF out (patch to J115)
J115	Mainframe IF in
J116	Remote frequency option connector (See table 2-2 for detailed information.)
J117	BB out (video & subcarrier)
CONFIGURATION D (INTELSAT VIDEO RECEIVER)	
J101	RF in
J102	LO out (patch to J113)
J103	70 MHz IF monitor
J104	Video out (or) switched de-emp out (patch to J106)
J105	BB out (or not used)
J106	BB in
J107	Video out
J108	#1 BB switch in (or test slot J136-A)

TABLE 2-1. RECEIVER REAR-PANEL CABLE CONNECTIONS-continued

Connector Pin	Function
J109	#2 BB switch in (or test slot J136-B)
J110	BB switch out (or test slot J136-C)
J111-A	Test slot J136-H (or +12V dc redundant power in)
-B	Test slot J136-J (or -12V dc redundant power in)
-C	Shield for A and B
-D	Spare
-E	-20V dc
-F	AGC out
-G -H	Major alarm (closure)
-J -K	Minor alarm (closure)
-L	Switchover command out (or test slot J136-L)
-M	Ground
-N	"RX 1 selected" indication (or test slot J136-N)
-P	"RX 2 selected" indication (or test slot J136-P)
-R	-24V dc
-S	+24V dc
-T	Common for RX1/RX2 indication (or test slot J136-T)
-U	Ground
-V	Switchover command in (or test slot J136-V)
-W	+12V dc
-X	-12V dc
-Y	Spare
-Z	Spare
J112	115V ac line input
J113	LO in (external LO or patch to J102)

TABLE 2-1. RECEIVER REAR-PANEL CABLE CONNECTIONS-continued

Connector Pin	Function
J114	Downconverter IF out (patch to J115)
J115	Mainframe IF in
J116	Remote frequency option connector (see table 2-2 for detailed information)
J117	Not used
	CONFIGURATION E (THRESHOLD EXTENSION MESSAGE)
J101	RF in
J102	LO out (patch to J113)
J103	70 MHz IF monitor
J104	Not used
J105	Demod BB out (patch to J106)
J106	BB amp in
J107	BB amp out
J108	#1 BB switch in (or test slot J136-A)
J109	#2 BB switch in (or test slot J136-B)
J110	BB switch out (or test slot J136-C)
J111-A	Test slot J136-H (or +12V dc redundant power in)
-B	Test slot J136-J (or -12V dc redundant power in)
-C	Shield for A and B
-D	Spare
-E	-20V dc
-F	AGC out
-G -H	Major alarm (closure)
-J -K	Minor alarm (closure)
-L	Switchover command out (or test slot J136-L)

TABLE 2-1. RECEIVER REAR-PANEL CABLE CONNECTIONS-continued

Connector -Pin	Function
-M	Ground
-N	"RX 1 selected" indication (or test slot J136-N)
-P	"RX 2 selected" indication (or test slot J136-P)
-R	-24V dc
-S	+24V dc
-T	Common for RX1/RX2 indication (or test slot J136-T)
-U	Ground
-V	Switchover command in (or test slot J136-V)
-W	+12V dc
-X	-12V dc
-Y	Spare
-Z	Spare
J112	115V ac line input
J113	LO IN (external LO or patch to J102)
J114	Downconverter IF out (patch to J115)
J115	Mainframe IF in
J116	Remote frequency option connector (see table 2-2 for detailed information)
J117	Not used
J119	Remote Interface SU Table 2-3

CONFIGURATION F (MESSAGE WITHOUT THRESHOLD EXTENSION)

Connector -Pin	Function
J101	RF in
J102	LO out (patch to J113)
J103	70 MHz IF monitor
J104	Not used
J105	Demod BB out (patch to J106)

TABLE 2-1. RECEIVER REAR-PANEL CABLE CONNECTIONS-continued

Connector -Pin	Function
J106	BB amp in
J107	BB amp out
J108	#1 BB switch in (or test slot J136-A)
J109	#2 BB switch in (or test slot J136-B)
J110	BB switch out (or test slot J136-C)
J111-A	Test slot J136-H (or +12V dc redundant power in)
-B	Test slot J136-J (or -12V dc redundant power in)
-C	Shield for A and B
-D	Spare
-E	-20V dc
-F	AGC out
-G -H	Major alarm (closure)
-J -K	Minor alarm (closure)
-L	Switchover command out (or test slot J136-L)
-M	Ground
-N	"RX 1 selected" indication (or test slot J136-N)
-P	"RX 2 selected" indication (or test slot J136-P)
-R	-24V dc
-S	+24V dc
-T	Common for RX1/RX2 indication (or test slot J136-T)
-U	Ground
-V	Switchover command in (or test slot V)
-W	+12V dc
-X	-12V dc
-Y	Spare

TABLE 2-1. RECEIVER REAR-PANEL CABLE CONNECTIONS-continued

Connector -Pin	Function
-Z	Spare
J112	115V ac line input
J113	LO in (external LO (or patch to J102)
J114	Downconverter IF out (patch to J115)
J115	Mainframe IF in
J116	Remote frequency option connector (see table 2-2 for detailed information)
J117	Not used

TABLE 2-2. REMOTE FREQUENCY OPTION CONNECTOR

Connector -Pin	Function
J116-A	Channel 1 Select
-B	Channel 2 Select
-C	Channel 3 Select
-D	Channel 4 Select
-E	Channel 5 Select
-F	Channel 6 Select
-G	Channel 7 Select
-H	Channel 8 Select
-J	Channel 9 Select
-K	Channel 10 Select
-L	Channel 11 Select
-M	Channel 12 Select
-N	Ground
-P	Remote
-Q	N. C.
-R	N. C.
-S	N. C.
-T	N. C.
-U	N. C.
-V	N. C.
-W	N. C.
-X	N. C.
-Y	N. C.
-Z	N. C.

TABLE 3-1. RECEIVER MAINFRAME CONTROLS AND INDICATORS

Control/Indicator	Position	Function
Power ON/OFF switch	ON (lit)	AC power applied to receiver
	OFF (dark)	AC power removed from receiver
METER FUNCTION switch (used in conjunction with multifunction meter next to switch)	OFF	Meter disconnected
	-24	Meter reads voltage on receiver -24V dc bus
	-20	Meter reads output from -20V dc supply in downconverter (derived from receiver -24V dc bus)
NOTE Read voltages on top meter scale.	-12	Meter reads voltage on receiver -12V dc bus
	+12	Meter reads voltage on receiver +12V dc bus
	+24	Meter reads voltage on receiver +24V dc bus
	DEMOD BB BB 1 BB 2 AUX 1 AUX 2	These switch positions connect the meter to read various audio and video levels at the outputs and inputs of the modules plugged into the mainframe. Refer to the operating and level-setting instructions in this section and to the individual-module sections in this instruction manual for further information. The metering does not respond to message signals.
CARRIER/NOISE meter		Gives an indication of the ratio of carrier to noise. The meter actually reads (carrier + noise)/noise, and at very low carrier levels will read a little higher than the actual carrier level. At higher levels, however, noise contribution to the meter reading is insignificant.

3.3 OPERATION

3.3.1 Power Turn-On/Turn-Off

a. Press the ON/OFF switch to apply power to the receiver. The switch will light if power is available.

CAUTION

Do not remove or insert a module with power applied. Always turn off the receiver.

b. Press the ON/OFF switch to remove power from the receiver.

3.3.2 Front-Panel Meter and Switch

A multifunction meter and selector switch on the mainframe front panel permit monitoring and rapid checking of the circuits in the receiver during operation. The METER FUNCTION switch may be left in any position during operation. In the OFF position, the meter is completely disconnected.

3.3.3 Receiver Preliminary Settings

Refer to the appropriate section in this instruction manual for further information on the individual modules.

a. Apply power to the receiver by pressing the ON/OFF switch. The switch will light when power is applied.

b. Select an operating frequency with the FREQUENCY SELECT switch on the downconverter unit. If the receiver is a single-conversion unit, its operating frequency is fixed. Refer to the Test Data section for the frequency at which the downconverter will operate. No adjustment should be required of the RF input level as the AGC range of the receiver should be sufficient for interfacing with the RF levels obtained in normal earth station configurations.

c. Set the AGC-MGC switch on the IF amplifier (if one is installed) to the AGC position.

d. Some means must be provided to completely remove the carrier from the link so that the receiver IF circuits can be zeroed on noise. This noise must include sky noise and all contributors of noise in the receiving system. Either of the following methods may be used, in order of preference:

   1. Remove the carrier by shutting down the uplink.

   2. Tune the downconverter to an open frequency.

e. Adjust the ZERO ON NOISE control on the IF amplifier for 0 dB on the CARRIER/NOISE meter.

f. If it is impossible to remove the carrier by either of the methods in step d above, and if the normal operating carrier/noise ratio is known from previous data, from calculations, or from out-of-band noise measurements, set the CARRIER/NOISE meter to this figure with the ZERO ON NOISE control on the IF amplifier.

g. Lock the ZERO ON NOISE control and return the link and/or receiver to normal operation. The CARRIER/NOISE meter should be reading the carrier level in dB above noise (actually carrier + noise above noise). Check to see that this is correct for the geographical location of the antenna. If the reading is low, the antenna may not be pointed exactly at the target, or there may be a malfunction in the RF circuitry that precedes the receiver.

h. Set the METER FUNCTION switch to each of the voltage positions and check the operating voltages in the receiver. They should all be within 10% of the nominal value.

Check the carrier/noise ratio periodically and readjust the ZERO ON NOISE control if necessary. Typical stability of the overall system gain should be on the order of 1 dB per month.

The receiver IF circuits are now correctly adjusted. Baseband-level settings must be performed before the receiver is ready to operate on line.

3.3.4 Video Receiver Baseband Level Setting

Before attempting to set any of the baseband levels in the receiver, make sure that the adjustments of paragraphs 3.3.1 through 3.3.3 have been previously made.

Note

In almost all cases only slight level adjustments are required during installation and maintenance of the receiver in the field, since all levels are properly set at the factory. It is highly advisable that only the controls on the video clamp be adjusted when level adjustments are required.

There are three basic ways that video baseband levels can be adjusted. The method used will depend on the test equipment available, as well as the operating situation at the moment that level setting is required. Carefully read all three ways before attempting any level adjustments. The methods of level adjustments are given in order of accuracy of adjustment.

A. LEVEL ADJUSTMENT USING TEST TONE FREQUENCIES. This method of level adjustment will most likely not be used during transmission through the satellite. However, where a modulator and upconverter are available this provides the most accurate means of level setting. Following is a step-by-step procedure.

1. Set the equipment up as shown in figure 3-2.

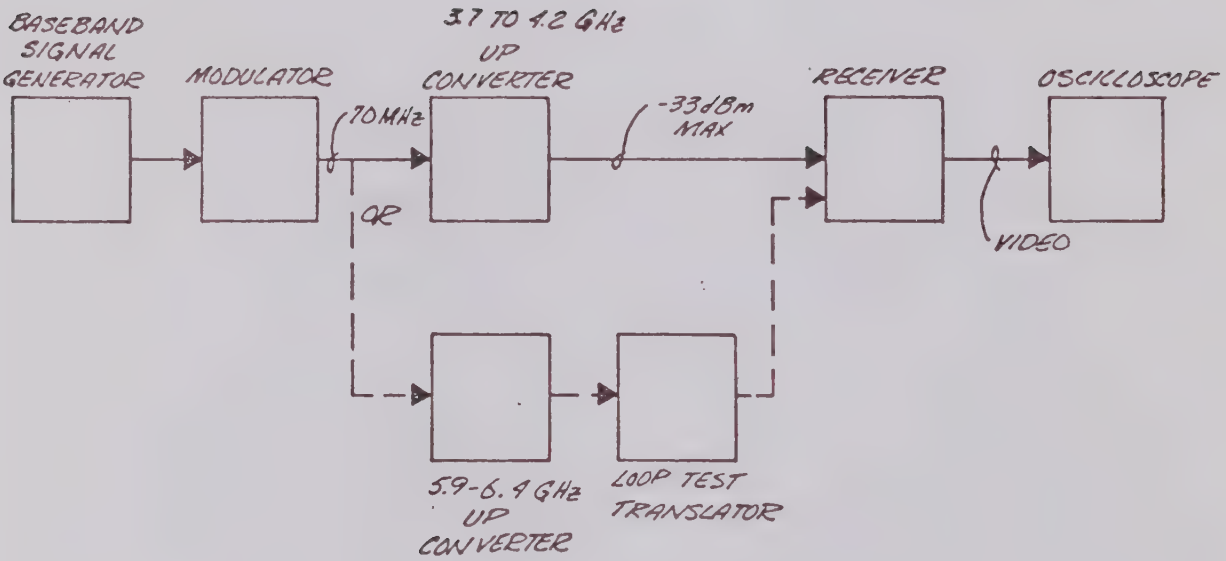

Figure 3.2 Test Tone Method of Level Adjustment

Note that no pre-emphasis is shown since the level is to be adjusted only at the test-tone frequency. If a pre-emphasis network is available it may be inserted between the baseband signal generator and the modulator to allow frequency response measurements.

2. Adjust the signal out of the baseband signal generator to yield the proper deviation at the pre-emphasis crossover frequency out of the modulator. Table 3-1 lists deviation information for typical video formats as well as levels required into a Scientific-Atlanta modulator if one is used.

TABLE 3.2 DEVIATION INFORMATION

(Reference to ICSC-45-13E except as noted by asterisk)

IF Bandwidth MHz	Television Standard	Pre-emphasis Crossover Frequency (Fx) MHz	Peak-to-Peak Deviation at Fx (MHz)	Peak-to-Peak Level Required Into S-A Modulator (Into 75 Ohms) at Fx (Volts Peak-to-Peak)
17.5	525/60	.7616	15.0	.294
17.5	625/50	1.512	15.0	.294
30	525/60	.7616	21.5	.421
30	625/50	1.512	18.1	.354
*36	525/60	.7616	22	.430
*36	625/50	1.512	22	.430

3. Adjust the output of the demodulator for 1.0 volt peak-to-peak into 75 ohms as noted on an oscilloscope terminated in 75 ohms.

4. Take the video clamp out of the clamped position using either the rear-panel switch (on older models), or the front-panel switch (position is DE-EMP UNC'LPD).

5. Using an oscilloscope terminated in 75 ohms, adjust both the baseband and video outputs for 1.0 volt peak-to-peak.

6. Return the video clamp to clamped operation.

B. LEVEL ADJUSTMENT DURING SATELLITE TRANSMISSION AND WHEN SERVICE CAN BE INTERRUPTED. The technique used here is to adjust the video clamp first, and then adjust the demodulator by setting the video output level for 1 volt peak-to-peak.

1. Remove the video clamp and subcarrier demodulator (if one is installed) from their slots.

CAUTION

Do not remove or insert a module with power applied. Always turn off the receiver.

2. Insert the video clamp in the test slot of the receiver (second slot from the extreme right-hand side of the receiver as you face its front panel).
3. Input a 1.0 volt peak-to-peak signal at the crossover frequency (see table 3-2) into J108 on the rear panel of the receiver.
4. Disable the clamp as in step 4 of part A.
5. Adjust the video level control for a 1.0 volt peak-to-peak level out of J110 and adjust the baseband level control for 1.0 volt peak-to-peak level out of J109. Levels are measured on an oscilloscope terminated in 75 ohms. The outputs shown above are for standard single-wide video clamps. Where special video clamps are used it may be necessary to open the units to get to the outputs. If this is required, refer to the video clamp section of the manual to locate output pins. The most convenient way to perform the adjustment for outputs that are not available on the rear panel is to use a high impedance probe ($\geq$ 10K ohms) and place it on the emitter side of the output resistor. The level at this point should be adjusted for 2.0 volts peak-to-peak.

6. Return the clamp and any other modules which were removed to their normal positions. Connect the video output to a terminated waveform monitor or oscilloscope. Return the video clamp to clamped operation.
7. With an off-the-air signal adjust the demodulator level until a 1.0 volt peak-to-peak sync tip to white reference pulse level is observed. This requires that a VITS line is available. If no VITS is present, adjust the demod level until the sync pulses are of a 40 IRE units or 0.286 volts amplitude.

C. LEVEL ADJUSTMENT DURING SATELLITE TRANSMISSION WHEN SERVICE CANNOT BE INTERRUPTED. Level adjustment under these conditions should be done using the chassis multifunction meter. In addition, the adjustment should be done using only the controls on the video clamp if possible.

1. Turn the meter function switch to the position to monitor the video output level (BB1 in standard single-width plug-in module video clamps; AUX 1 in double-width plug-in module video clamps).
2. Since the level detector for the video clamp is a peak detector, the levels can be most accurately set on a bright scene. Do not make level adjustments on dark scenes as the output level will tend to be set too high. Adjust the video control on the video clamp for a 1 volt peak-to-peak output level which occurs when the meter deflects to the 1.0 mark.
3. Turn the meter function switch to the position to monitor the baseband output level (BB2 for standard single-width plug-in module video clamps; BB2 for double-width plug-in module video clamps).

4. On a bright scene adjust the baseband level control until the meter deflects to the 1.0 mark. This will set the output to approximately 1.0 volt peak-to-peak.

5. Adjust the demodulator only if the levels in steps 3 or 4 cannot be set to one volt peak-to-peak. If this occurs, adjust the demodulator only as required to restore the output to 1.0 volt peak-to-peak.

6. If there is buzzing in the sound in a video format that uses a subcarrier to transmit the sound, it is possible that the level out of the demodulator may be too high or that the balance control in earlier units (where the balance control is on the front panel) may be misadjusted. If there is a balance control on the front panel of the demodulator, this control should be adjusted slightly until the buzzing disappears. If this does not solve the problem, then a slight adjustment of the level control may solve the problem. In demodulators with only a level control on the front panel a slight adjustment to reduce the level out of the demodulator (counterclockwise) may help the buzzing.

CAUTION

Do not make large adjustments of the demodulator controls. If more than very slight adjustments are required, a complete level setting procedure of either section A or B will be required to insure high quality video performance. If slight adjustments of the demodulator controls do not solve the problem, a complete and accurate check of the receiver controls (using section A or B) is required.

This completes baseband-level setting. If an audio demodulator is installed in the last slot in the receiver mainframe, refer to paragraph 3.3.6 for further information.

3.3.5 Message Receiver Baseband Level Setting

The following information describes level setting procedures using a test-tone deviation. Level adjustment during actual service operation is much more difficult and should be attempted only as a last resort to maintain service. One technique which may be used during actual service is to adjust levels using the pilot signal. A few precautions should be noted. First it is imperative that the pilot deviation is accurately known, and second, it must be noted that the output of the demodulator is not de-emphasized.

Before attempting to set any of the baseband levels in the receiver, make sure that the IF adjustments of paragraph 3.3.3 have been done. The baseband level-setting adjustments will require some external test equipment (see figure 3-3). In addition, the correct IF filter, threshold-extension loop filter, and de-emphasis board must be installed in the receiver. These items are listed in table 3-4 and correspond to the channel capacity of the global beam carrier to be received.

Read the following steps carefully before performing the procedure.

a. Refer to table 3-4 and install the correct IF filter module corresponding to the channel capacity of the carrier to be received.

CAUTION

Remove power before removing or inserting a module.

b. Note the part number of the demodulator in the mainframe to insure it is capable of handling the required channel capacity.

Channel Capacity	Demodulator Part No.
12 to 432	209411
24 to 1872	131675

c. In the threshold extension receiver (Configuration E) install the correct loop-filter board in the threshold extension unit. Refer to table 3-4.

d. If a pilot-noise monitor module is installed, the proper noise slot filter must be used. Refer to table 3-4.

e. Install the proper de-emphasis board in the baseband amplifier as shown in table 3-4.

f. Connect the test equipment shown in figure 3-3 to the receiver and apply power to all equipment. Allow the equipment to stabilize for about 15 minutes before performing any level setting.

g. Adjust the step attenuator to obtain a level at the input of the receiver that does not exceed the maximum level into the receiver and is not less than 30 dB below the maximum level into the receiver. Table 3-3 lists the maximum levels into the receiver for various filter bandwidths.

TABLE 3-3. MAXIMUM LEVELS INTO THE RECEIVER

IF Filter Bandwidth	IF Filter Part Number	Maximum Level into the Receiver (dBm)
1.25	206105	-48.0
2.5	209160	-45.0
5.0	209161	-42.0
7.5	209162	-40.2
10.0	209163	-39.0
15	209164	-37.2
17.5	209165	-36.6
20	209166	-36.0
25	209167	-35.0
30	131629	-34.2
36	209168	-33.4
No filter	--	-25

Note

If there is any reason to believe that the threshold extension unit is not adjusted properly, it should be switched OUT for level setting. The section of the manual discussing the threshold extension module describes alignment procedures.

h. Install the proper pre-emphasis network for the channel capacity, and set the test-tone deviation of the modulator at the test-tone frequency according to table 3-5, or as specified for the RF links under test.

i. Remove the patch cable from J105 and connect the HP 312A Wave Analyzer to J105.

j. Adjust the BB LEVEL control on the message demodulator for a level of -25 dBm on the 312A.

k. Remove the 312A connection to J105, reconnect the patch cable from J105 to J106, and connect the 312A to J107.

l. Rotate the BB LEVEL control on the baseband amplifier fully clockwise. The 312A should indicate at least -15 dBm. Reset the BB LEVEL control on the baseband amplifier for -25 dBm or as required for the system (between -28 and -15 dBm per channel).

m. Refer to table 3-5. The maximum fully loaded output from the receiver will be the level set in l above plus the noise-loading (NL) factor from table 3-5 in dB. For example, for a 24-channel carrier, at -25 dBm per channel, the maximum level will be -20.48 dBm.

n. Lock all controls.

This completes the level-setting procedures for the message receivers. If it is required to change the baseband level, always adjust the BB LEVEL control on the baseband amplifier. DO NOT ADJUST THE DEMODULATOR unless the link parameters have been changed to a different test-tone deviation.

3.3.6 Audio Level Setting

In video and subcarrier audio receivers (Configuration B), an audio demodulator can be installed as an option. A LINE LEVEL control on this module is used to set the audio level into the program line. IF and baseband adjustments must be made before the audio line level can be set.

a. Set the METER FUNCTION switch to the AUX 1 position.

b. Adjust the LINE LEVEL control on the audio demodulator for the desired audio level. Read the bottom scale on the meter. For a steady test tone, the meter should deflect to +10 dBm. On fluctuating program material, the meter lags signal peaks to a degree that depends on the nature of the program and the amount of limiting employed at the point of origination. For the nominal output level, the meter should show "frequent peaks" of about 0 dBm.

c. The MONITOR VOLUME control on the audio demodulator controls only the volume from the speaker in the module, and has no effect on the line level. The LINE LEVEL control, however, will change the volume from the speaker.

3.3.7 Level Setting of Modules in Auxiliary Chassis

Modules installed in auxiliary chassis should be set up the same way as equivalent modules in the receiver mainframe. Special auxiliary chassis have level setting procedures discussed in their manual sections which appear in the accessories portion of this manual.

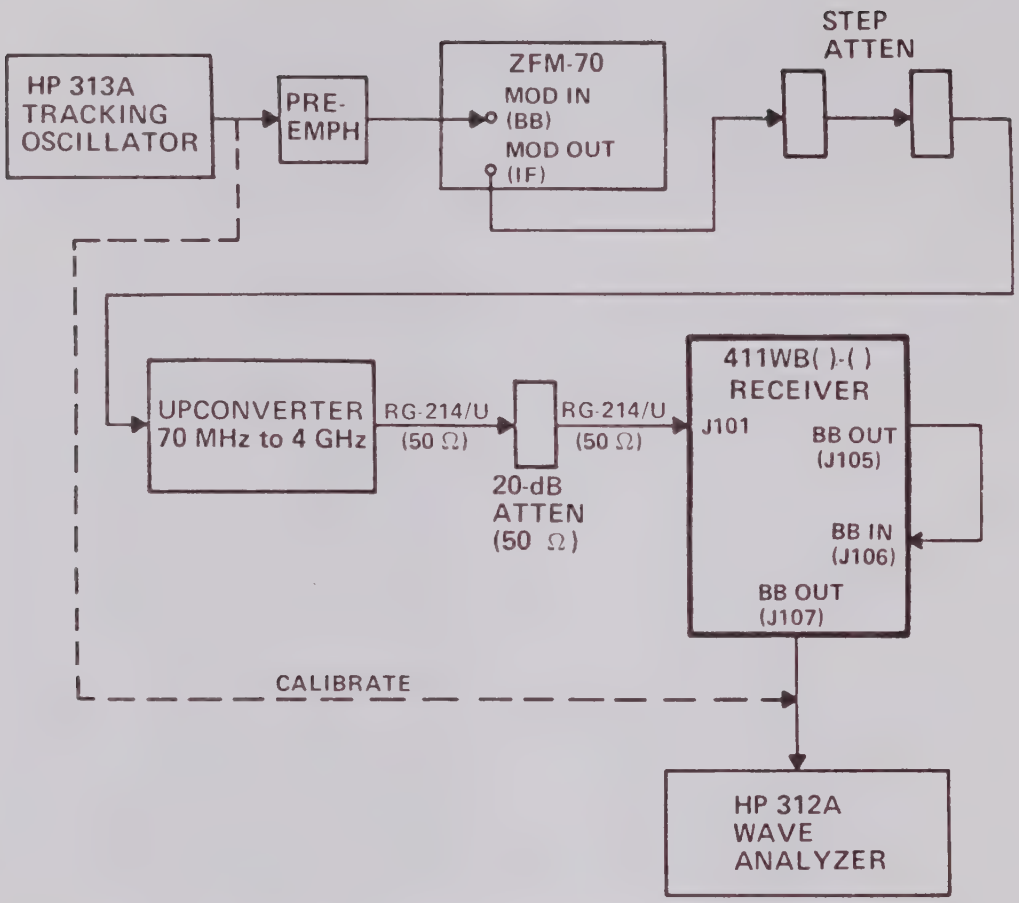

NOTE: ALL CABLES ARE 75 OHMS UNLESS OTHERWISE SPECIFIED.

EQUIPMENT LIST

Hewlett-Packard Model 313A Tracking Oscillator
Hewlett-Packard Model 312A Wave Analyzer
Wandel und Goltermann Model ZFM-70 70-MHz IF Measuring Instrument
Pre-Emphasis Network Appropriate for Channel Capacity

Figure 3-3. Equipment Set-Up Required for Baseband-Level Setting of Message Receivers

TABLE 3-4. MODULE REQUIREMENTS

Channel Capacity	Threshold Extension Unit 201880 Loop Filter Board S-A Part No.	Baseband Amplifier 131612 De-emphasis Boards S-A Part No	Pilot Noise Alarm 204160 OBN Filter S-A Part No.
12	202820	141442	204176
24	202821	131705	204177
36	202822	131706	204178
48	202823	141443	204179
60	202824	131707	204180
72	202825	131708	204181
84*	202826	141444	204182
96	202827	131709	204183
108*	202828	141445	204184
120*	202829	141446	204185
132	202830	131710	204186
144*	202831	141447	204187
180*	202832	141448	204188
192	202833	131711	204189
252	202834	131712	204190
312	202835	131713	204191
360*	202836	141449	204192
432	202837	131714	204193
612		131715	204195
792		131716	204196
972		131717	204197
1092		131718	204198
1200*		159457	204199
1332*		205252	205253
1440*			204200
1872*		131719	204201

* Non-standard capacity
Consult Factory

TABLE 3-5. TRANSMISSION AND SET-UP PARAMETERS

General Information							Level Into S-A Mod (140 kHz/-40 dBm)			BB Amplifier Levels (25 dBm/Ch)			EDU Attn
Channel Capacity	BW (MHz)	Top BB Freq (kHz)	Test Tone Freq (kHz)	Noise Load Ratio (dB)	RMS Test Devia (kHz)	RMS MC Devia (kHz)	TT Devia (dBm)	RMS Devia (dBm)	1st Car Null @ TT Freq	BB Amp Input 1st Car Null @TT Freq	N. L. into BBA	BBA Out@ TT	
12	1.25	60	36.48	3.32	109	159	-42.17	-38.85	-47.07	-29.90	-21.68	-20.03	30.0
24	2.5	108	65.66	+4.52	164	275	-38.63	-34.11	-41.96	-28.33	-20.48	-21.22	25.5
36	2.5	156	94.85	+5.23	168	307	-38.42	-33.18	-38.77	-25.35	-19.77	-21.93	24.5
60	2.5	252	153.2	6.11	136	276	-40.25	-34.14	-34.61	-19.36	-18.89	-22.81	25.5
60	5.0	252	153.2	6.11	270	546	-34.30	-28.19	-34.61	-25.31	-18.89	-22.81	19.5
72	2.5	300	182.4	6.43	125	261	-40.98	-34.55	-33.09	-17.11	-18.57	-23.13	26.0
72	5.0	300	182.4	6.43	294	616	-33.56	-27.12	-33.09	-24.53	-18.57	-23.13	18.5
96	5.0	408	248.1	6.93	263	584	-34.52	-27.59	-30.42	-20.90	-18.07	-23.63	19.0
96	7.5	408	248.1	6.93	360	799	-31.80	-24.87	-30.42	-23.62	-18.07	-23.63	16.0
132	5.0	552	335.6	7.48	223	529	-35.96	-28.48	-27.79	-16.83	-17.52	-24.18	19.5
132	7.5	552	335.6	7.48	376	891	-31.42	-23.94	-27.79	-21.37	-17.52	-24.18	15.0
132	10.0	552	335.6	7.48	430	1020	-30.25	-22.77	-27.79	-22.54	-17.52	-24.18	14.0
192	5.0	804	488.8	8.13	180	459	-37.82	-29.69	-24.53	-11.71	-16.87	-24.83	21.0
192	7.5	804	488.8	8.13	297	758	-33.47	-25.34	-24.53	-16.06	-16.87	-24.83	16.5
192	10.0	804	488.8	8.13	457	1167	-29.72	-21.59	-24.53	-19.81	-16.87	-24.83	13.0
252	7.5	1052	639.6	9.01	260	733	-34.62	-25.61	-22.19	-12.57	-15.99	-25.71	17.0
252	10	1052	639.6	9.01	358	1009	-31.84	-22.83	-22.19	-15.35	-15.99	-25.71	14.0
252	15	1052	639.6	9.01	577	1627	-27.70	-18.69	-22.19	-19.49	-15.99	-25.71	10.0
312	10	1300	790.4	9.94	320	1005	-32.82	-22.88	-20.35	-12.53	-15.06	-26.64	14.0
312	15	1300	790.4	9.94	546	1716	-28.17	-18.23	-20.35	-17.18	-15.06	-26.64	9.5
432	15	1796	1092	11.35	401	1479	-30.86	-19.51	-17.55	-11.69	-13.65	-28.05	10.5
432	17.5	1796	1092	11.35	517	1919	-28.65	-17.30	-17.55	-13.90	-13.65	-28.05	8.5
432	20	1796	1092	11.35	616	2276	-27.13	-15.78	-17.55	-15.42	-13.65	-28.05	7.0
432	25	1796	1092	11.35	729	2688	-25.67	-14.32	-17.55	-16.88	-13.65	-28.05	5.5
612	20	2540	1544	12.87	454	1996	-29.78	-16.91	-14.54	-9.76	-12.13	-29.57	8.0
792	20	3284	1997	13.99	356	1784	-31.89	-17.90	-12.30	-5.41	-11.01	-30.69	9.0
792	25	3284	1997	13.99	499	2494	-28.96	-14.97	-12.30	-8.34	-11.01	-30.69	6.0

TABLE 3-5. TRANSMISSION AND SET-UP PARAMETERS - continued

General Information							Level Into S-A Mod (140 kHz/-40 dBm)			BB Amplifier Levels (25 dBm/Ch)			EDU Attn
Channel Capacity	BW (MHz)	Top BB Freq (kHz)	Test Tone Freq (kHz)	Noise Load Ratio (dB)	RMS Test Devia (kHz)	RMS MC Devia (kHz)	TT Devia (dBm)	RMS Devia (dBm)	1st Car Null TT Freq	BB Amp Input 1st Car Null @TT Freq	N. L. into BBA	BBA Out @ TT	
972	25	4028	2449	14.88	410	2274	-30.67	-15.79	-10.53	-4.86	-10.12	-31.58	7.0
972	36	4028	2449	14.88	802	4417	-24.84	-9.96	-10.53	-10.69	-10.12	-31.58	1.0
1092	36	4892	2974	15.38	701	4118	-26.01	-10.62	- 8.84	- 7.83	- 9.62	-32.08	2.0
1332	36	5884	3577	16.25	591	3834	-27.49	-11.24	- 7.24	- 4.75	- 8.75	-32.95	2.5
1872	36	8120	4937	17.72	419	3181	-30.48	-12.75	- 4.44	+ 1.04	- 8.28	-34.42	4.0

SECTION 4
DETAILED DESCRIPTION

4.1 GENERAL

This section describes the receiver mainframe and illustrates the signal flow through the plug-in modules for the various options. For detailed theory of operation of the modules, refer to the appropriate section in this instruction manual.

4.2 UNIT CONSTRUCTION

The mainframe is a U-shaped aluminum chassis with an integral rear panel. The front panel is attached to the chassis with screws. All input and output connectors, as well as the ac power-line fuse, are on the rear panel. Operating controls are on the front panel.

The right section of the mainframe provides slide-in mounting facilities for the receiver modules. Machined tracks in a plate at the bottom of the chassis guide the modules smoothly into position so they will positively mate with interface connectors on a bracket near the rear of the chassis.

The left section is occupied by the downconverter. This unit is attached to the mainframe with screws and can be removed if necessary.

A modular power supply is mounted on the rear panel, and is secured with screws. Input either is ac line voltage of 115 or 230 volts (part number 91479) or -28 volts dc (part number 134030) outputs are ±24V dc and ±12V dc. The heat sink for the power-supply transistors is part of the power supply module.

Internal wiring for all five receiver configurations is identical. DC operating voltages are carried to the interface connectors of all modules, whether or not a module is inserted. Signal input and output interconnection are made via the rear-panel connectors so that, with the appropriate external patch cables connected, the modules in any configuration will be properly interconnected. Rear-panel patches are also furnished for such signals as the 70 MHz

IF and 1st local oscillator to permit access to these signals for system testing and/or calibration.

4.3 ELECTRICAL DESCRIPTION

Signal flow through the receiver is quite straightforward and is illustrated by the functional block diagrams of figure 4-1. Input- and output-patching requirements are illustrated. Figure 4-2 is a gain/level distribution diagram for all receiver configurations.

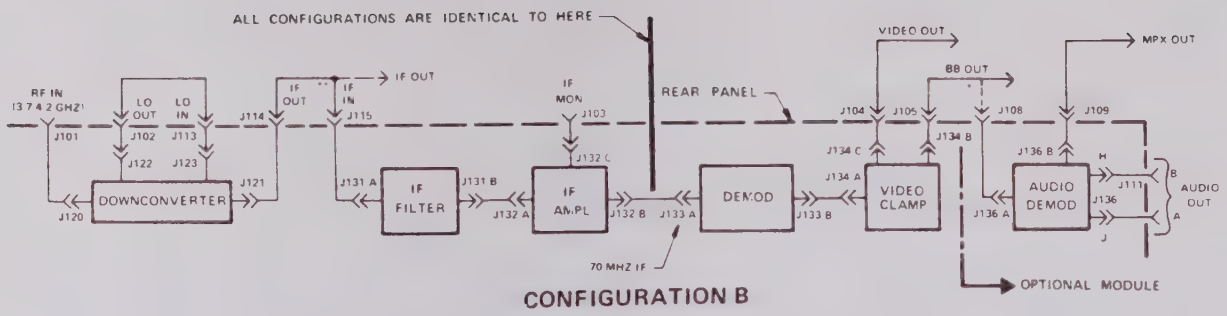

CONFIGURATION B

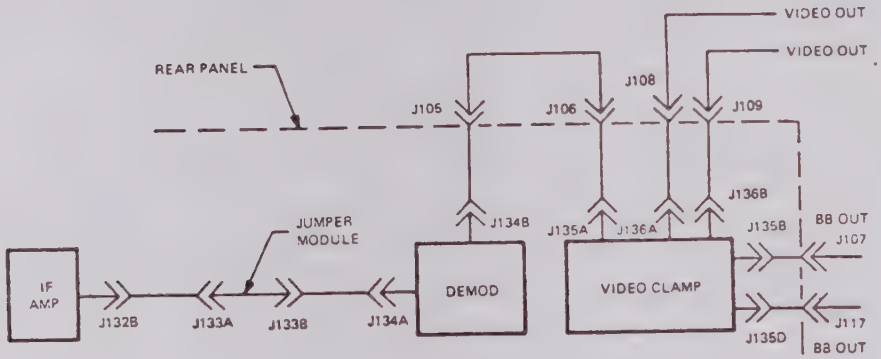

CONFIGURATION C

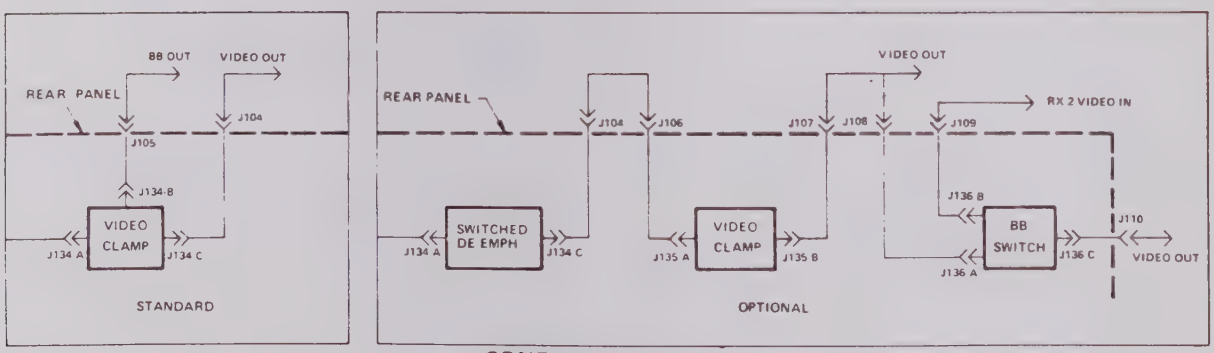

CONFIGURATION D

D0874-1

Figure 4-1. Signal Flow Through Models 411WB Receivers

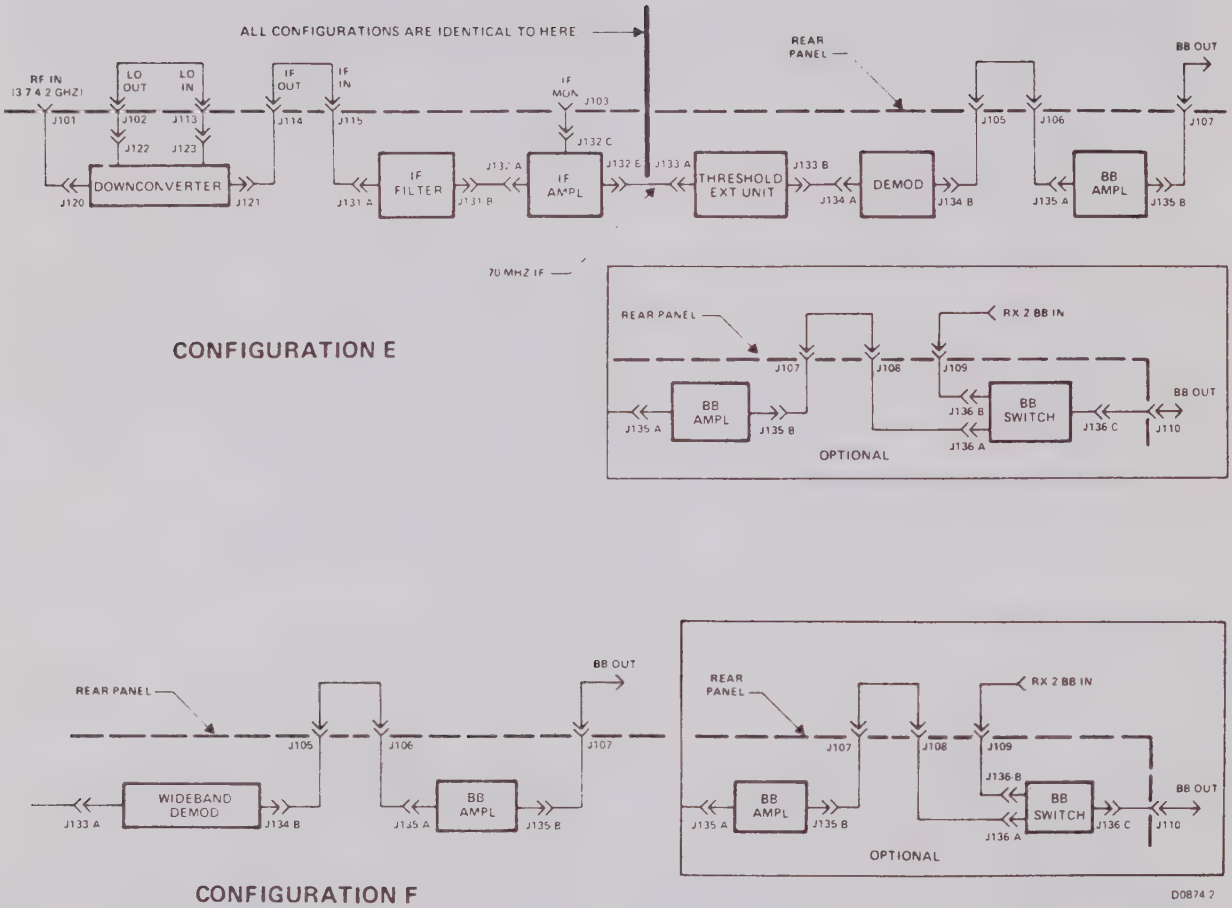

Figure 4-1. (Continued) Signal Flow Through Models 411WB Receivers

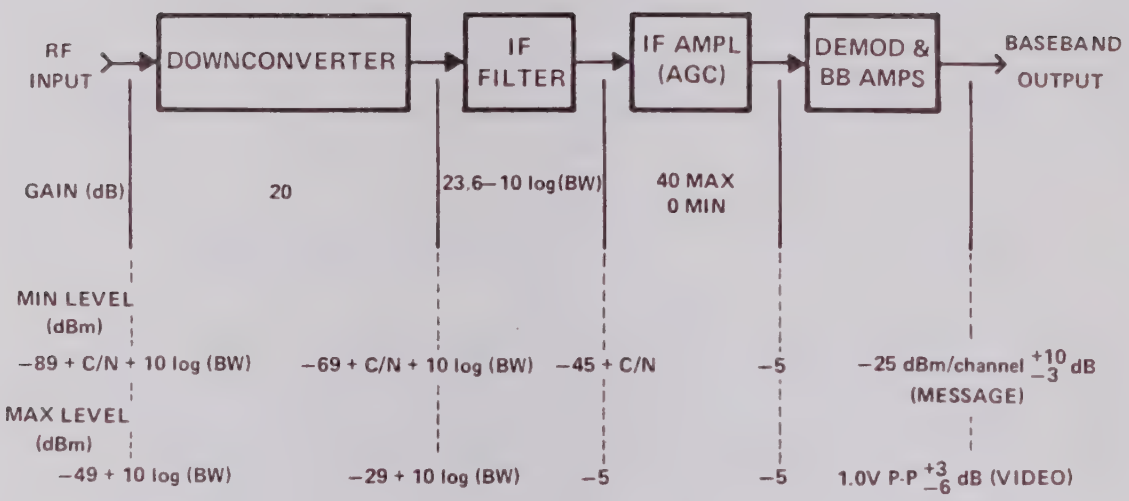

NOTES:
1. (BW) IS IF FILTER BANDWIDTH IN MHZ
2. C/N IS OPERATING C/N RATIO IN dB.
3. BASEBAND LEVELS ARE FOR 0 dBm0 TEST TONE.

D0874-7

Figure 4-2. Receiver Gain/Level Distribution

SECTION 5
MAINTENANCE

5.1 GENERAL

This section contains information for the general maintenance of the overall receiver. Alignment of the complete receiver is included in this section. However, for alignment and adjustment instructions for the individual receiver modules, refer to the appropriate section of this instruction manual.

5.2 PREVENTIVE MAINTENANCE

Periodically check the receiver mainframe for signs of damage from mechanical abuse. Look for evidence of overheating in the power-supply area and in the downconverter module. Keep the interior of the mainframe clean. Wipe the channels in which the modules slide to remove dirt and dust. A very thin coat of silicone grease applied to the channels about every six months will ensure that the modules will slide in and out easily.

Make sure there is no trash accumulated in or around the connectors at the rear of the channels. Use an air hose (low pressure) to blow out the connectors. One cause of hard mating, or mismating, of the module and mainframe connectors is that the connector on the module is not "floating." The module connector should be slightly loose in its mounting to allow for slight misalignment between the module and the housing connectors. Also, check the pins in the connectors to make sure they are all straight. Replace or straighten any bent pin immediately before the connector is permanently damaged (refer to parts list).

Keep the heat-sink area of the power-supply assembly on the rear of the mainframe clean and unobstructed. Use a low-pressure air hose and a small brush to dislodge any foreign matter. For maintenance information on the power supply, refer to section 8 of this instruction manual. Voltages within the mainframe can be checked at the connectors at the rear of the

slide channels. Pin connections and voltages that should be present are shown on the mainframe schematic diagram in section 7 of this instruction manual.

5. 3 TROUBLESHOOTING AND REPAIR

Rapid receiver troubleshooting can be performed with the METER FUNCTION switch on the mainframe, regardless of the receiver configuration. In some configurations, however, no meter reading will be obtained at certain METER FUNCTION switch positions. This is normal, and will be noted in the paragraphs that follow.

5. 3. 1 Troubleshooting

a. Check the dc operating voltages in the receiver with the METER FUNCTION switch. All voltages should be within 10% of their nominal value. If all voltages are lost and the front-panel ON/OFF switch is not lit, rear-panel slo-blow fuse F1 is probably blown. Determine the cause of the blown fuse before replacing it. If dc voltages appear to be present, but the ON/OFF switch is not lit, check the lamp in the switch.

b. If all the receiver dc voltages are bad, and the ON/OFF switch is lit, either of two fuses in the power supply have blown, or the power supply or meter have malfunctioned. Check the voltages at the pins of the module connectors, or J111 on the receiver rear panel, if the meter is suspected (see the receiver mainframe schematic diagram in section 7 of this instruction manual).

c. If all the positive or negative voltages are missing, one of the power supply fuses has probably blown. The power supply must be removed from the receiver to change these fuses (see section 8 of this instruction manual).

d. If only the -20V dc voltage is lost, check the dropping/regulator circuit in the downconverter module. These components are near the large power transistor on a sheet-metal heat sink about half way back on the right side of the downconverter. This voltage is derived from the -24V dc supply, and is fused by the negative-supply fuse in the power supply.

5. 3. 2 Obtaining Replacement Parts

All electrical and mechanical part replacements can be obtained through your local Scientific-Atlanta sales office or representative. However, many standard electronic components can be obtained locally in less time than is required to order them from Scientific-Atlanta, Inc.

Note

When selecting replacement parts, it is important to remember that the physical size and shape of a component may affect its performance in the unit, particularly at high frequencies. All replacement parts should be direct replacements unless it is known that a different component will not adversely affect instrument performance.

In addition to the standard electronic components, some special parts are used. These parts are manufactured, modified, or selected by Scientific-Atlanta, Inc., to meet specific performance requirements, or are manufactured for Scientific-Atlanta, Inc., in accordance with our specifications. Most mechanical parts have been manufactured by Scientific-Atlanta, Inc. Order all special parts directly from your local Scientific-Atlanta sales office or representative. See section 6 for information required when ordering replacement parts.

5. 3. 3 Soldering Techniques

WARNING

DISCONNECT THE EQUIPMENT FROM THE AC POWER SOURCE BEFORE SOLDERING.

5. 3. 3. 1 Circuit Boards. Use ordinary 60/40 solder and a 35- to 40-watt pencil type soldering iron on the circuit boards. The tip of the iron should be clean and properly tinned for best heat transfer to the solder joint. A higher wattage soldering iron may separate the copper circuit from the base material.

The following technique should be used to replace a component on a circuit board:

a. Touch the soldering iron to the lead at the solder connection and remove excess solder from the mounting pad with a vacuum or wick de-soldering device. Do not lay the iron directly on the board, as it may damage the board.

b. Unbend the clinched lead. Touch the iron to the connection and pull the lead out gently with long-nose pliers. Pull in a direction that will tend to press the pad against the board rather than pull it away. This should leave a clean hole in the board. If not, the hole can be cleaned by reheating the solder and clearing the hole with a vacuum desoldering tool or a sharp object such as a toothpick.

c. Bend the leads of the new component to fit the holes in the board. Insert the leads into the holes in the board so the component is firmly seated against the board (or as positioned originally). Clinch the leads across the pads and cut away the excess leads.

d. Touch the iron to the connection and apply a small amount of solder to make a firm solder joint. To protect heat-sensitive components, hold the lead between the component body and the solder joint with a pair of long-nose pliers or other heat sink.

e. Clean the area around the solder connection with an approved flux-remover solvent.

5. 3. 3. 2 Metal Terminals. When soldering metal terminals (e. g. , switch terminals, potentiometers, connectors, etc.) ordinary 60/40 solder can be used. Use a soldering iron with a 40- to 75-watt rating and a 1/8-inch wide wedge-shaped tip.

The following technique should be used when replacing a part having metal terminals:

a. Straighten (unbend) all leads or wires and then heat the leads or wires, one at a time, working around the terminal until the component or wires can be gently rocked out. For parts with multileads or wires, tag the leads or wires to aid in connecting the new part.

b. Install the new part and form the leads or wires around the terminal connections.

c. Touch the soldering iron to the terminal and apply only enough solder to form a solid connection. Excess solder may impair the function of the part.

d. If a wire extends beyond the solder joint, clip off the excess.

e. Clean the flux from the solder joint with approved flux-remover solvent.

5. 3. 4 Component Replacement on Circuit Boards

Always remove power from the circuit when replacing parts. Use a small, pencil iron, preferably about 40W. The following procedure is suggested:

a. Cut the defective part loose from the board, leaving as much of a "pull-off tail" on the component lead as possible.

b. "Tack" the replacement component to the pull-off tails and check circuit operation.

c. If the replacement component cured the trouble, unsolder the component from the pull-off tails.

d. Heat the tails, one at a time, at their solder pad and gently pull the wire out of the hole. Always try to pull the wire out of the hole so that pressure will be placed on the pad to press it against the board surface. Excessive pressure on the pad away from the board may loosen the foil from the board.

e. Remove any excess solder from the pad and install the new component. Form and cut the leads as required.

f. Solder the replacement component in position. Use a heat sink on all semiconductor leads between the body of the component and the soldering point.

g. Check the board closely to make sure that solder has not accidently flowed onto an adjacent conductor path.

5.3.5 Power Transistor Replacement

Power transistors mounted on a heat sink are usually insulated from ground with bushings and insulating washers made of Teflon, fiber, or mica. When replacing these transistors, be sure the insulating material is replaced in the proper order. Before installing the large mica spacer, wipe both sides with a film of silicone grease. This treatment helps in the transfer of heat. After the transistor is mounted, and before making any connections, check from case of the transistor to the heat sink with a multimeter to check that the insulation is effective.

5.4 PERFORMANCE TEST PROCEDURES

5.4.1 Individual Modules

Calibration, alignment, adjustment, and/or test procedures that are contained in each of the sections of this intruction manual for the individual modules can be used to determine if the module is functioning correctly and within factory specifications. The items of test equipment listed for each

module and the point and conditions of measurement should be carefully duplicated to ensure that meaningful results are obtained. If a particular operation appears to yield unsatisfactory results, carefully check the instructions to make sure that all conditions have been correctly met.

Note

Before substituting any test instrument, read the procedure and check the measurement or test functions of the recommended instrument. The new instrument must meet or exceed the specifications of the recommended instrument for all required measurement or test functions.

Special calibration or test fixtures mentioned in the maintenance sections will facilitate performance checks, but usually are not required unless specifically stated. Use of the module test slot built into the mainframe allows powering of modules and access to all inputs and outputs.

Module extender kits, extension test cables, and other similar maintenance equipment are available from Scientific-Atlanta, Inc. Contact your sales representative or the Customer Service Department of the Satellite Communications Division at the address on the title sheet of this instruction manual for ordering information.

5.4.2 Overall Receiver

The following procedures can be used to determine if the receiver is operating within specifications and should be performed after any corrective maintenance operation that involved parts replacement or alignment.

Test Procedure	Procedure No.
RF Input Signal Level Dynamic Range	132300
RF to Baseband Frequency Response and Baseband Output Level*	132315
NPR vs C/T and Clean-Carrier NPR*	210879
Receiver NPR	210784
Receiver Video Tests**	142231
TEU Alignment Procedure	142257

*Message receivers only.
**Video receivers only.

APPLICATION		REVISIONS			
NEXT ASSY	USED ON	SYM	DESCRIPTION	DATE	APPROVED
		A	3.0.2: rewritten. Shts. after sht. 2 re-numbered	1-10-74	
		B	General Revision	4-14-74	

REV																													
SHEET																													
REV STATUS	REV																												
OF SHEETS	SHEET																												

ALL DIMENSIONS ARE IN INCHES UNLESS OTHERWISE SPECIFIED

TOLERANCES
3 PLACE DECIMALS ± .005
2 PLACE DECIMALS ± .02
1 PLACE DECIMAL ± .1

FRACTIONS ± ANGLES ± 0 30

MAX SURFACE ROUGHNESS 125/ ALL MACHINED SURFACES EXCEPT AS NOTED

BREAK SHARP EDGES AND CORNERS .010 MAX

FINISH

CONTRACT NO

DSN

ENGR 4-14-74

PROD

APVD 4-14-74

APVD

Scientific-Atlanta, Inc.
3845 Pleasantdale Road, Atlanta, Georgia 30340

TEST PROCEDURE MODEL 411
WB(D) 3.7-4.2 RECEIVER RF INPUT
SIGNAL LEVEL DYNAMIC RANGE

SIZE	CODE IDENT NO	DRAWING NO
A	10110	132300

SCALE	REV B	SHEET 1

1.0 PURPOSE OF TEST

The purpose of this test is to measure the RF input signal level dynamic range of Model 411 WB(D) -3.7-4.2 receivers.

2.0 EQUIPMENT REQUIRED

The following equipment is required to perform this test:

1. RF Signal Generator, HP8616 or Equal
2. IF Power Meter, GM454 or Equal
3. 75-50 ohm Adaptor, 6 dB

3.0 PROCEDURE

The test consists of applying a variable RF input level to the receiver and adjusting this level over the input signal level range specified for the receiver. The AGC IF monitor point is monitored with an RF power meter to determine if the receiver AGC operates over the required range.

1. Connect the equipment as shown in Figure 1.
2. Determine the required minimum and maximum signal levels for the receiver under test according to Table 1.
3. Set the signal generator to a frequency for which the receiver is equipped. Using the signal generator calibrated attenuator, vary the receiver input level between the maximum and minimum required input levels, while observing the IF output level. The IF output level shall be -5 ±2 dBm over the input signal level range. (Note: +6 dB is added to the power meter reading to account for 75 to 50 ohm adaptor loss.) Record the results on the test data sheet.

SCIENTIFIC-ATLANTA, INC. SATELLITE COMMUNICATIONS DIVISION	SIZE A	CODE IDENT NO 10110	DRAWING NO 132300
	SCALE	REV	SHEET 2

TABLE 1.

Receiver Input Level

IF Bandwidth (MHz)	Max (dBm)	Min (dBm)
1.5	-47.2	-87.2
2.5	-45.0	-85.0
3.0	-44.2	-84.2
3.5	-43.6	-83.6
4.5	-42.5	-82.5
5.0	-42.0	-82.0
6.0	-41.2	-81.2
7.5	-40.2	-80.2
8.0	-40.0	-80.0
9.0	-39.5	-79.5
10.0	-39.0	-79.0
10.5	-38.8	-78.8
15.0	-37.2	-77.2
17.5	-36.6	-76.6
20.0	-36.0	-76.0
25.0	-35.0	-75.0
30.0	-34.2	-74.0
32.0	-33.9	-73.9
36.0	-33.4	-73.4

SCIENTIFIC-ATLANTA, INC. SATELLITE COMMUNICATIONS DIVISION	SIZE A	CODE IDENT NO 10110	DRAWING NO 132300
	SCALE	REV	SHEET 3

Test Data Sheet

Receiver Input Level Dynamic Range

Model 411WB(D) 3.7 - 4.2 S/N_____

Date_____Performed By_____

Approved_____

Witnessed_____

	Input Signal Level	IF Level	Required IF Level
Maximum:	_____dBm	_____dBm	-5 ±2 dBm
Minimum:	_____dBm	_____dBm	-5 ±2 dBm

SCIENTIFIC-ATLANTA, INC. SATELLITE COMMUNICATIONS DIVISION	SIZE A	CODE IDENT NO 10110	DRAWING NO A132300
	SCALE	REV	SHEET 4

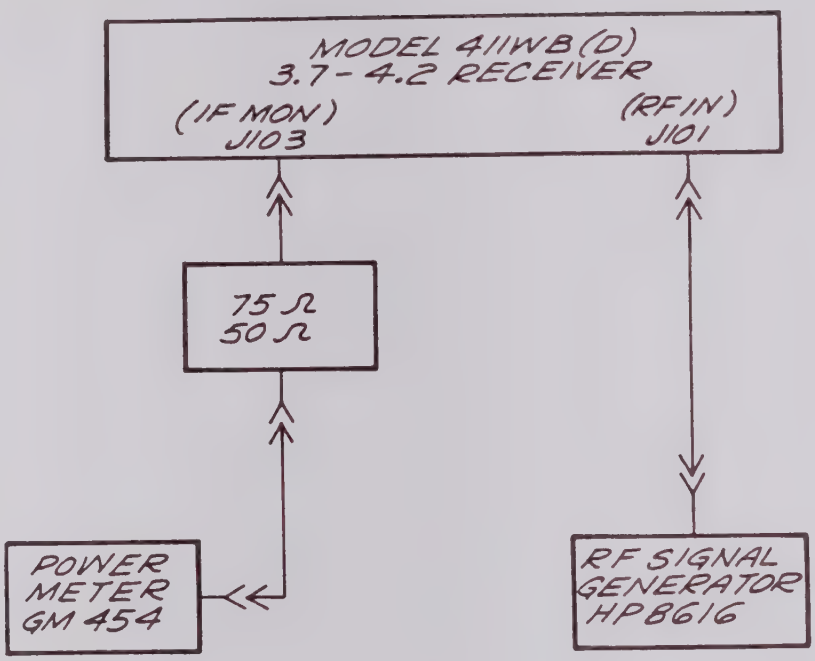

Figure 1. Input Signal Dynamic Range

SCIENTIFIC-ATLANTA, INC. SATELLITE COMMUNICATIONS DIVISION	SIZE A	CODE IDENT NO 10110	DRAWING NO 132300
	SCALE	REV	SHEET 5

APPLICATION		REVISIONS			
NEXT ASSY	USED ON	SYM	DESCRIPTION	DATE	APPROVED
		A	Expanded Table 1	7/12/76	H. Wegener
		B	General Revision	5-16-78	C A Reid

REV																										
SHEET																										
REV STATUS	REV	B	B	B	B	B	B	B	B																	
OF SHEETS	SHEET	1	2	3	4	5	6	7	8																	

ALL DIMENSIONS ARE IN INCHES UNLESS OTHERWISE SPECIFIED

TOLERANCES
3 PLACE DECIMALS ± .005
2 PLACE DECIMALS ± .02
1 PLACE DECIMAL ± 1

FRACTIONS ± ANGLES ± 0°30

MAX SURFACE ROUGHNESS 125 ALL MACHINED SURFACES EXCEPT AS NOTED

BREAK SHARP EDGES AND CORNERS .010 MAX

SATELLITE COMMUNICATIONS DIVISION

CONTRACT NO

DWN E Smith 4/25/78

ENGR H. Wegener

CHK Woody Hudson

PROD

APVD Heinz Wegener 4/14/76

Scientific-Atlanta, Inc.
3845 Pleasantdale Road, Atlanta, Georgia 30340

TEST PROCEDURE
411 WB(D) 3.7 - 4.2 Receiver RF to BB
Frequency Response and BB Output Level

SIZE	CODE IDENT NO	DRAWING NO
A	10110	132315

SCALE	REV	SHEET
	B	1

1.0 SCOPE

The purpose of this test is to measure the RF-to-baseband gain flatness, AGC-to-baseband gain linearity and baseband output level of the Model 411 WB(D) Receiver.

2.0 EQUIPMENT REQUIREMENTS

Item	Description
Test Exciter	Standard S-A 461 exciter with loop test translator or S-A 461 exciter modified for output in receive frequency range.
Test Modulator (70 MHz)	S-A/131725
Level Measuring Set	Wandel and Golterman/PSM-5
Display Unit	Wandel and Golterman/SG-2
Display Expander	Wandel and Golterman/AZD-1
Pre-Emphasis Network	See table 1
RF Step Attenuator, 1-dB Steps	Weinschel/115Δ-09-34
RF Step Attenuator, 10-dB Steps	Weinschel/116Δ-60-34

TABLE 1. S-A LAB STANDARD PRE-EMPHASIS NETWORK ASSEMBLIES

Channel Capacity	Lab Standard Part Number
12	147301
24	147302
36	147303
48	147304
60	147305
72	147306
84	147307
96	147308
108	147309
120	147310

TABLE 1. S-A LAB STANDARD PRE-EMPHASIS NETWORK ASSEMBLIES - continued

Channel Capacity	Lab Standard Part Number
132	147311
144	147312
180	147313
192	147314
252	147315
312	147316
360	147317
432	147318
600-612	147319
792	147320
972	147321

3.0 PROCEDURE

a. Calibrate the W&G level measuring set back-to-back by noting any deviations from a flat baseband response.

b. Connect the equipment as shown in figure 1, installing the proper pre-emphasis network for the channel capacity of the receiver (table 1). Adjust the step attenuators to obtain a level at the input of the receiver under test which is in the middle of its dynamic range (refer to table 2 for the dynamic range of the various receiver bandwidths).

c. Set the deviation of the test modulator at the test tone frequency according to table 3.

d. Connect the W&G receiver input to J105 and turn the demodulator BB LEVEL control fully CW. Measure and record the maximum demodulator output level at the test tone frequency. The required maximum is ≥-22 dBm. Set the output level to -25 dBm with the BB LEVEL control, and check the data sheet.

e. Without changing any level adjustments, connect J105 to J106 and connect J107 to the W&G input. Record the level out of the baseband unit. Also, record

the level range obtained when the baseband amplifier's BB LEVEL control is varied from CCW to CW. Set the level to -25 dBm and check the data sheet.

f. Divide the difference between the top BB frequency and 12 kHz by 10 to get an appropriate frequency increment. Record the deviation of the BB level from the test tone frequency reference at the selected frequencies on the data sheet. Scan the frequencies between the test points (manually, or on a slow sweep) and note that no deviation greater than the tolerance occurs at these frequencies.

g. Turn the sweep off and set CW FREQ to crossover. Set the RF input level to the minimum shown for that bandwidth in table 2. Measure the BB output. Record the BB output and the RF-to-BB deviation. Repeat the test at the maximum RF level.

h. With the input signal removed and the input connector terminated, set the W&G receiver scale to -90 and scan the entire receiver bandwidth. Check "OK" on the data sheet when no spurs greater than -90 dBm are visible.

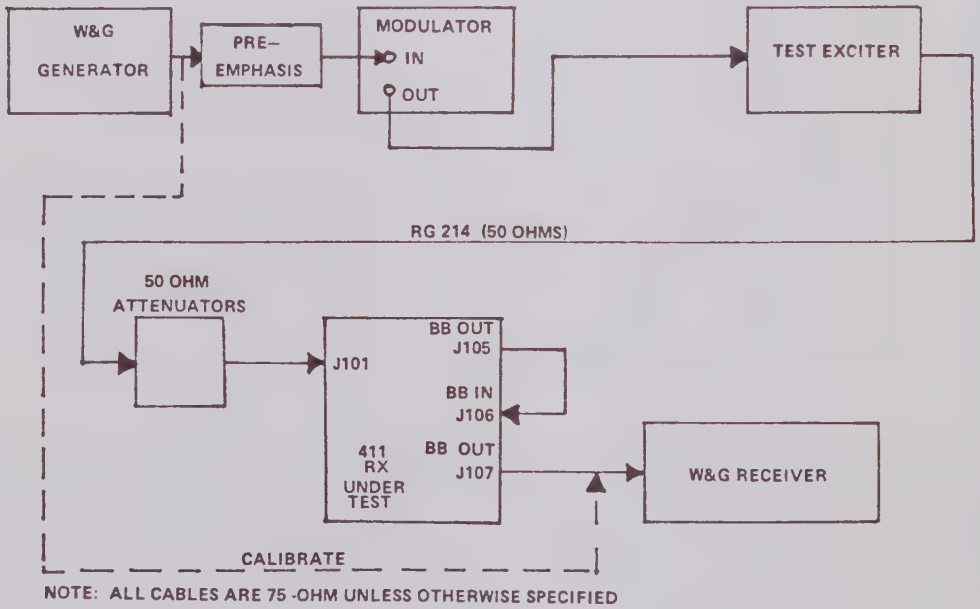

Figure 1. RF/BB Test Set Up

SCIENTIFIC-ATLANTA, INC. SATELLITE COMMUNICATIONS DIVISION	SIZE A	CODE IDENT NO 10110	DRAWING NO 132315
	SCALE	REV B	SHEET 4

TABLE 2. RECEIVER INPUT LEVEL

IF Bandwidth (MHz)	Max (dBm)	Min (dBm)
1.5	-47.2	-87.2
2.5	-45.0	-85.0
3.0	-44.2	-84.2
3.5	-43.6	-83.6
4.5	-42.5	-82.5
5.0	-42.0	-82.0
6.0	-41.2	-81.2
7.5	-40.2	-80.2
8.0	-40.0	-80.0
9.0	-39.5	-79.5
10.0	-39.0	-79.0
10.5	-38.8	-78.8
15.0	-37.2	-77.2
17.5	-36.6	-76.6
20.0	-36.0	-76.0
25.0	-35.0	-75.0
30.0	-34.2	-74.0
32.0	-33.9	-73.9
36.0	-33.4	-73.4

SCIENTIFIC-ATLANTA, INC. SATELLITE COMMUNICATIONS DIVISION	SIZE A	CODE IDENT NO 10110	DRAWING NO 132315
	SCALE	REV B	SHEET 5

TABLE 3

Channel Capacity	BW (MHz)	Top BB Freq (kHz)	Test Tone Freq (kHz)	Noise Load Ratio (dB)	RMS Test Devia (kHz)	RMS MC Devia (kHz)
Intelsat						
24	2.5	108	65.66	+4.52	164	275
36	2.5	156	94.85	+5.23	168	307
60	2.5	252	153.2	6.11	136	276
60	5.0	252	153.2	6.11	270	546
72	2.5	300	182.4	6.43	125	261
72	5.0	300	182.4	6.43	294	616
96	5.0	408	248.1	6.93	263	584
96	7.5	408	248.1	6.93	360	799
132	5.0	552	335.6	7.48	223	529
132	7.5	552	335.6	7.48	376	891
132	10.0	552	335.6	7.48	430	1020
192	5.0	804	488.8	8.1	180	459
192	7.5	804	488.8	8.13	297	758
192	10.0	804	488.8	8.13	457	1167
252	7.5	1052	639.6	9.01	260	733
252	10	1052	639.6	9.01	358	1009
252	15	1052	639.6	9.01	577	1627
312	10	1300	790.4	9.94	320	1005
312	15	1300	790.4	9.94	546	1716
432	15	1796	1092	11.35	401	1479
432	17.5	1796	1092	11.35	517	1919
432	20	1796	1092	11.35	616	2276
432	25	1796	1092	11.35	729	2688
612	20	2540	1544	12.87	454	1996
792	20	3284	1997	13.99	356	1784
792	25	3284	1997	13.99	499	2494
972	25	4028	2449	14.88	410	2274
972	36	4028	2449	14.88	802	4417
1092	36	4892	2974	15.38	701	4118
1332	36	5884	3577	16.25	591	3834
1872	36	8120	4937	17.72	419	3181
Specials						
12	1.5	60	36.48	+3.32	118	173
36	3.0	156	94.85	+5.23	206	376
36a, 48	3.5	60-204	124.0	+5.23	245	447
60	4.5	252	153.2	+6.11	270	546
72	5.0	300	182.4	+6.43	302	633
84	6.0	360	218.9	+6.70	338	731
108	7.5	456	277.2	+7.13	388	882
120	8.0	504	306.4	+7.32	412	957
144	9.0	612	372.1	+7.63	461	1110
180	10.5	756	459.6	+8.02	485	1221
360	20	1500	912.0	+10.56	694	2341
600	32	60-2540	1544	+12.78	869	3785
612	36	2540	1544	+12.87	1036	4558

SCIENTIFIC-ATLANTA, INC. SATELLITE COMMUNICATIONS DIVISION	SIZE A	CODE IDENT NO 10110	DRAWING NO 132315
	SCALE	REV B	SHEET 6

TEST DATA SHEET

Receiver RF/BB Gain Flatness; BB Output Level
Model 411WB(D) 3.7 - 4.2 Serial Number _____

Date_____ Performed By_____

Approved_____

Witnessed_____

Receiver Input Level	_____	dBm
Channel Capacity	_____	channels
Test Tone Frequency	_____	kHz
Test Tone Deviation	_____	kHz (rms)

			Required	Check OK
3.0.d	Demod Max Output Level	_____dBm	-22 dBm	
	Demod set to -25 dBm			_____
3.0.e	Baseband Unit Max Output Level	_____dBm	-20 dBm	
	Baseband Unit Gain Range	_____to____dBm	-28 to -15 dBm	
	Baseband Unit set to -25 dBm			_____

3.0.f Gain Flatness (Referenced to TT Frequency)

Frequency (kHz)	Deviation (dB)	Required
4-12	_____	±0.5 dB
12	_____	±0.25 dB
_____	_____	±0.25 dB
_____	_____	±0.25 dB
_____	_____	±0.25 dB
_____	_____	±0.25 dB
_____	_____	±0.25 dB
_____	_____	±0.25 dB
_____	_____	±0.25 dB
_____	_____	±0.25 dB
_____(Top Freq.)	_____	±0.25 dB

SCIENTIFIC-ATLANTA, INC. SATELLITE COMMUNICATIONS DIVISION	SIZE A	CODE IDENT NO 10110	DRAWING NO 132315
	SCALE	REV B	SHEET 7

3.0.g AGC/BB Gain Linearity

		Baseband Output Level	Deviation
Minimum RF Input Level	_____dBm	_____dBm	_____dB
Maximum RF Input Level	_____dBm	_____dBm	_____dB

Required Maximum Deviation ±0.2 dB

3.0.h Spurious Response _____OK

SCIENTIFIC-ATLANTA, INC. SATELLITE COMMUNICATIONS DIVISION	SIZE A	CODE IDENT NO 10110	DRAWING NO 132315
	SCALE	REV B	SHEET 8

APPLICATION			REVISIONS			
QTY REQD	NEXT ASSY	USED ON	REV	DESCRIPTION	DATE	APPROVED
REF	STD	411/414				

REV | SHT | DWG NO. 210879

SHEET																																		
REV																																		
REV STATUS OF SHEETS	SHEET	1	2	3	4	5	6	7	8																									
	REV																																	

ALL DIMENSIONS ARE IN INCHES UNLESS OTHERWISE SPECIFIED

TOLERANCES
3 PLACE DECIMAL ± .005
2 PLACE DECIMAL ± .02
1 PLACE DECIMAL ± .1

FRACTIONS ± ANGLES ±0° 30'

MAX SURFACE ROUGHNESS ALL MACHINED SURFACES EXCEPT AS NOTED 125 √

BREAK SHARP EDGES AND CORNERS .010 MAX

FINISH

CONTRACT NO.

DWN	D. Dorsett	12-11-80
ENGR	Thomas C. Wirt	12/15/80
CHK	C. O. Williams	12/15/80
PROJ	L. W. Scott	1-6-81
APVD		
APVD		

Scientific-Atlanta 3845 Pleasantdale Road Atlanta, Georgia 30340

TEST PROCEDURE FOR RECEIVER
CLEAN CARRIER NPR

SIZE	FSCM NO.	DWG NO.	REV
A	10110	210879	
SCALE		SHEET 1 of 8	

SA434-179

1.0 PURPOSE OF TEST

The purpose of this test is to measure the NPR under clean carrier conditions.

2.0 EQUIPMENT REQUIRED

The following equipment or equal is required:

a. Noise Generator/Receiver

b. SA Test Exciter

c. RMS Voltmeter

d. 75 ohm termination (2)

e. RF Power Meter

f. 50-ohm to 75-ohm minimum loss adapter, BNC

g. Spectrum Analyzer

3.0 PROCEDURE

3.1 Calibration Procedure

Modulator Calibration. In order to get accurate NPR results it is important that the modulator is properly adjusted.

a. Measure the output frequency of the modulator with its input terminated. If not 70 MHz ± 20 kHz, adjust the frequency to within these limits.

b. From Table 1, record on the data sheet the format information. Input the frequency into the modulator at the level required to produce the first carrier null for the format used. Connect the output of the modulator to a spectrum analyzer and adjust the deviation control on the modulator for a first carrier null.

3.2 Receiver Clean Carrier NPR Test

If a threshold extension unit (TEU) is used and there is any doubt whether it is working correctly, the TEU should be switched out or replaced with a jumper module while conducting the clean carrier NPR test. If the TEU is left in, it is important that the carrier to noise (C/N) meter reads greater than 20 dB while conducting this test. If this test is done on an RF loop, the level into the receiver should not drop lower than 20 dB below its maximum input level.

a. Set the appropriate high pass and low pass filters on the baseband noise generator to the in position and connect the output of the noise generator to the proper pre-emphasis network (consistent with the channel capacity being tested).

b. Set the noise level out of the pre-emphasis network for the value required to yield the proper multi-channel deviation (see Table 1). Also, if the rms voltmeter dBm scale is calibrated for an impedance other than 75 ohmns a reading correction factor of 10 log $\frac{75}{Z}$ will have to be added to the reading. For a scale calibrated in 600 ohms the correction factor is 10 log $\frac{75}{600}$ or -9 dB. Therefore, a -10 dBm level across 75 ohms will read -19 dBm on a scale calibrated in 600 ohms.

c. Be certain the baseband levels out of the receiver are properly adjusted. If there is any doubt check that the output of the demod is -25 dBm and the output of the baseband amp is correct at the test tone frequency and deviation.

Scientific-Atlanta 3845 Pleasantdale Road Atlanta, Georgia 30340	SIZE A	FSCM NO. 10110	DWG NO. 210879	REV
DWN N.D. 12-11-80	CHK C.O.V. 12-15-80	SCALE		SHEET 3 of 8

d. Connect the equipment according to figure 1.

e. Record on the data sheet the noise slot frequencies being used.

f. Measure the NPR (noise power ratio) and BINR (Basic Intrinsic Noise Ratio) and record their value on the test data sheet for the low, mid, and high noise slots.

g. Note the receiver carrier/noise meter reading.

h. Remove the test exciter from the receiver. Connect the output of a quiet and non-deviated 3.7-4.2 GHz signal set to a -33 dBm maximum level in to the receiver under test. Set the signal level to give the same carrier/noise meter reading noted in paragraph g above.

i. Measure and note for reference the BINR in the same 3 noise slots as in 3.2.f above. (This level must be lower than the BINR reading taken in paragraph f for this to be a valid calculation; i.e., if the level in f is a 56, then a 55 won't be a valid measurement in this step for a quiet oscillator.)

j. Determine the difference in dB between the NPR and the BINR readings recorded in step f. Convert this difference to a power ratio as follows:

   Power ratio (PR) = $10^{(\text{dB difference})/10}$

   Record as PR1 for calculations later.

   Repeat the above process for the NPR recorded in f and the BINR taken in i.

   Record as PR2 for calculations later.

k. Convert the NPR reading to pwp for the low, mid and high noise slots and note the results for calculating actual noise in step 1. Make the conversion as follows:

$$\text{Noise Power (pwp)} = 10^{(87.5-S/N)/10}$$

S/N is obtained by adding to the measured NPR the conversion factor for the proper channel capacity listed in Table 1.

1. Determine the corrected noise (CN) by the following and record on the test data sheet.

$$CN = pwp - \frac{N\ pwp}{PR1} - \frac{N\ pwp}{PR2}$$

N pwp = Computed noise (step k)
PR1 = Power ratio NPR to BINR TX-RX (step j)
PR2 = Power ratio NPR to BINR Osc - TX (step j)

Example:

(Step f) NPR = 47 dB
(Step f) BINR = 52 dB
dB difference = 5 dB; PR1 = 3.162

(Step f) NPR = 47 dB
(Step i) BINR = 54 dB
dB difference = 7 dB; PR2 = 5.01

(Step k) $Npwp = 10^{[87.5-(47 + 15.94*)]/10} = 10^{2.456} = 286$ pwp

$$CN = 286 - \frac{286}{3.162} - \frac{286}{5.01} = 286 - (90.4 - 57.0)$$

286 - 33.4 = 252.6 pwp corrected noise.

*192 channel system used for example

Required noise for a receiver, unless set otherwise, is to be 300 pwp for less than 432 channels, and 400 pwp for 432 and above. This should be entered as the required noise on the test data sheet.

Scientific-Atlanta 3845 Pleasantdale Road Atlanta, Georgia 30340	SIZE A	FSCM NO. 10110	DWG NO. 210879	REV
DWN T.D. 12-11-80	CHK J.O.N. 12-15-80	SCALE		SHEET 5 of 8

SA875-179

TEST DATA SHEETY

RECEIVER NPR TESTS

Model 411 WB (D) - 3.7 - 4.2 Receiver, Serial Number _____

APPROVED _____ PERFORMED BY _____

WITNESSED _____

Para. 3.1.1.B Format Information: Channel Capacity _____

IF Bandwidth _____ MHz

Test Tone Frequency _____ kHz

Test Tone Deviation _____ kHz, RMS

Multi-Channel Deviation _____ kHz, RMS

Para. 3.2 Clean Carrier NPR & BINR

	Measured NPR	Corrected Noise	Required Noise	BINR
Top Slot _____ kHz	_____ dB	_____ pwp	_____ pwp	_____ dB
Mid Slot _____ kHz	_____ dB	_____ pwp	_____ pwp	_____ dB
Bottom Slot _____ kHz	_____ dB	_____ pwp	_____ pwp	_____ dB

DWG NO 210879 | SH 7 | REV

Channel Capacity	BW (MHz)	Top RF Freq (kHz)	Test Tone Freq (kHz)	Noise Load Ratio (dB)	Bad Test Channels (kHz)	Bad MC Channels (kHz)	Level into S/A Mod (140 kHz/-40 dBm) TT Deviation (dBm)	Level into S/A Mod (140 kHz/-40 dBm) RMS Deviation (dBm)	Level into S/A Mod (140 kHz/-40 dBm) Int Cos Null @ TT Freq	S/N + NPR + (dB)	RX Max Sig Level (dBm)	8000 pwp C/T	NPR 8000 pwp	50,000 pwp C/T	NPR 50,000 pwp
12	1.25	60	36.48	3.32	109	159	-42.17	-38.85	-47.07	8.57	-47	-154.7	39.90	-160.7	31.94
24	2.5	108	65.66	+ 4.52	164	275	-38.63	-34.11	-41.96	10.39	-45	-153.0	38.11	-159.0	30.11
36	2.5	156	94.85	+ 5.23	168	307	-38.42	-33.18	-38.77	11.44	-45	-150.0	37.06	-156.0	29.06
60	2.5	252	153.2	6.11	136	276	-40.25	-34.14	-34.61	12.78	-45	-144.0	35.72	-150.0	27.72
60	5.0	252	153.2	6.11	270	546	-34.30	-28.19	-34.61	12.78	-42	-149.9	35.72	-155.9	27.72
72	2.5	300	182.4	6.43	125	261	-40.98	-34.55	-33.09	13.25	-45	-141.7	35.25	-147.7	27.25
72	5.0	300	182.4	6.43	294	616	-33.56	-27.12	-33.09	13.25	-42	-149.1	35.25	-155.1	27.25
96	5.0	408	248.1	6.93	263	584	-34.52	-27.59	-30.42	14.13	-42	-145.5	34.37	-151.5	26.37
96	7.5	408	248.1	6.93	360	799	-31.80	-24.87	-30.42	14.13	-40	-148.2	34.37	-154.2	26.37
132	5.0	552	335.6	7.48	223	529	-35.96	-28.48	-27.79	14.93	-42	-141.4	33.57	-157.4	25.57
132	7.5	552	335.6	7.48	376	891	-31.42	-23.94	-27.79	14.93	-40	-145.9	33.57	-151.9	25.57
132	10.0	552	335.6	7.48	430	1020	-30.25	-22.77	-27.79	14.93	-39	-147.1	33.57	-153.1	25.57
192	5.0	804	488.8	8.13	180	459	-37.82	-29.69	-24.53	15.94	-42	-136.3	32.56	-142.3	24.56
192	7.5	804	488.8	8.13	297	758	-33.47	-25.34	-24.53	15.94	-40	-140.6	32.56	-146.6	24.56
192	10.0	804	488.8	8.13	457	1167	-29.72	-21.59	-24.53	15.94	-39	-144.4	32.56	-150.4	24.56
252	7.5	1052	639.6	9.01	260	733	-34.62	-25.61	-22.19	16.25	-40	-137.1	32.25	-143.1	24.25
252	10	1052	639.6	9.01	358	1009	-31.84	-22.83	-22.19	16.25	-39	-139.9	32.25	-145.9	24.25
252	15	1052	639.6	9.01	577	1627	-27.70	-18.69	-22.19	16.25	-37	-144.1	32.25	-150.1	24.25
312	10	1300	790.4	9.94	320	1005	-32.82	-22.88	-20.35	16.25	-39	-137.1	32.25	-143.1	24.25
312	15	1300	790.4	9.94	546	1716	-28.17	-18.23	-20.35	16.25	-36	-141.7	32.25	-147.7	24.25
432	15	1796	1092	11.35	401	1479	-30.86	-19.51	-17.55	16.25	-37	-136.2	32.25	-142.2	24.25
432	17.5	1796	1092	11.35	517	1919	-28.65	-17.30	-17.55	16.25	-37	-138.5	32.25	-144.5	24.25
432	20	1796	1092	11.35	616	2276	-27.13	-15.78	-17.55	16.25	-36	-139.9	32.25	-145.9	24.25
432	25	1796	1092	11.35	729	2688	-25.67	-14.32	-17.55	16.25	-35	-141.4	32.25	-147.4	24.25
612	20	2540	1544	12.87	454	1996	-29.78	-16.91	-14.54	16.25	-36	-134.2	32.25	-140.2	24.25
792	20	3284	1997	13.99	356	1784	-31.89	-17.90	-12.30	16.24	-36	-129.9	32.26	-135.9	24.26
792	25	3284	1997	13.99	499	2494	-28.96	-14.97	-12.30	16.24	-35	-132.8	32.26	-138.8	24.26
972	25	4028	2449	14.88	410	2274	-30.67	-15.79	-10.53	16.24	-35	-129.4	32.26	-135.4	24.26
972	36	4028	2449	14.88	802	4417	-24.84	- 9.96	-10.53	16.24	-34	-135.2	32.26	-141.7	24.26
1092	36	4892	2974	15.38	701	4118	-26.01	-10.62	- 8.84	16.59	-34	-132.4	31.91	-138.4	23.91
1332	36	5884	3577	16.25	591	3834	-27.49	-11.24	- 7.24	16.52	-34	-129.3	31.98	-135.3	23.98
1872	36	8120	4937	17.72	419	3181	-30.48	-12.75	- 4.44	16.46	-34	-123.5	32.04	-129.5	24.04

Scientific-Atlanta 3845 Pleasantdale Road Atlanta, Georgia 30340

SIZE A | FSCM NO. 10110 | DWG NO. 210879 | REV

DWN N.D. 12-11-80 | CHK C.D.W. 12-15-80 | SCALE | SHEET 7 of 8

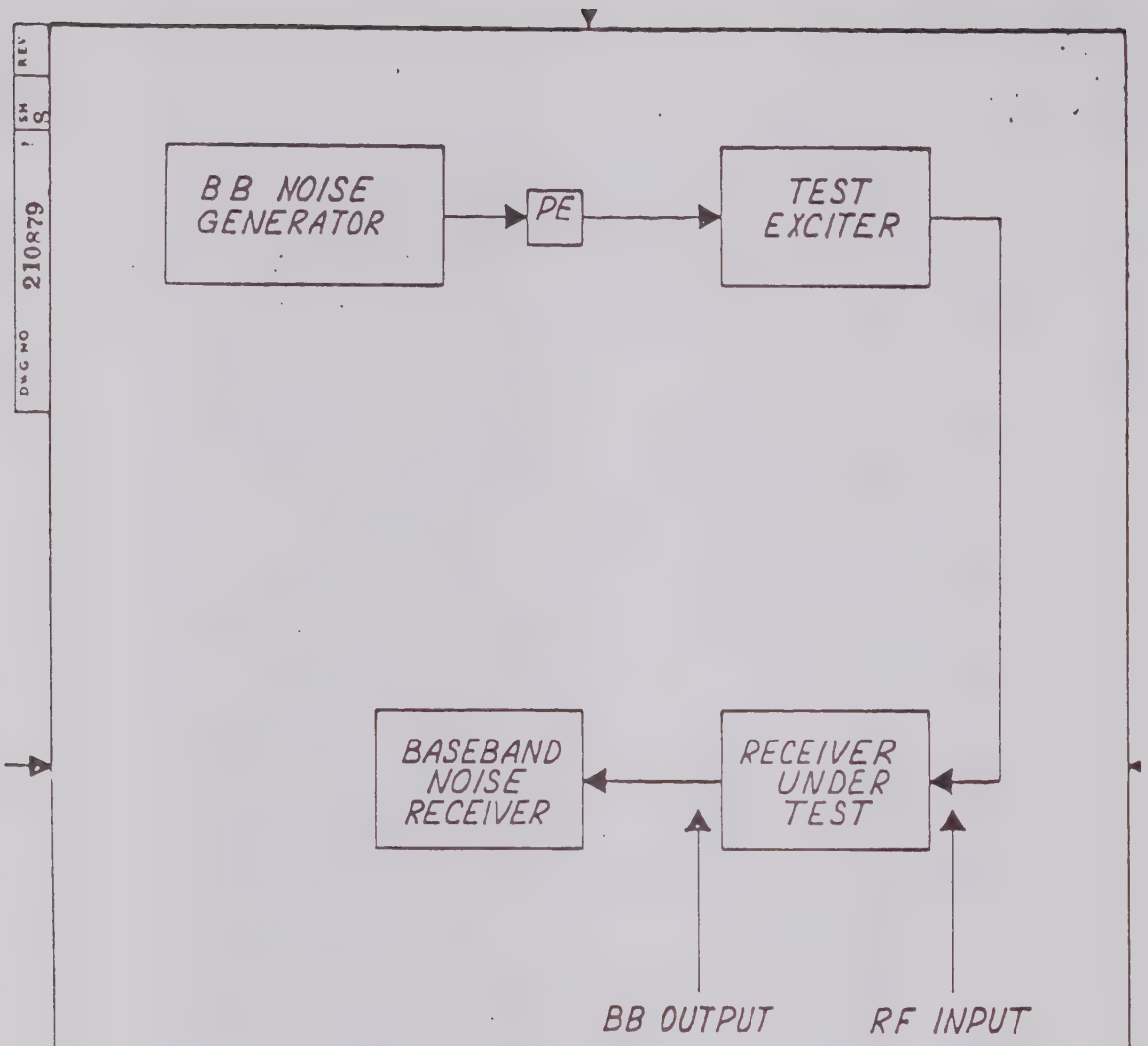

Figure 1

Test Set-up For NPR Measurement

APPLICATION			REVISIONS			
QTY REQD	NEXT ASSY	USED ON	REV	DESCRIPTION	DATE	APPROVED
Ref	Std	411				

DWG NO. 210784

SHEET																														
REV																														
REV STATUS OF SHEETS	SHEET	1	2	3	4	5	6	7																						
	REV																													

ALL DIMENSIONS ARE IN INCHES UNLESS OTHERWISE SPECIFIED

TOLERANCES
3 PLACE DECIMAL ± .005
2 PLACE DECIMAL ± .02
1 PLACE DECIMAL ± .1

FRACTIONS ± ANGLES 45° 30'

MAX SURFACE ROUGHNESS 125
ALL MACHINED SURFACES EXCEPT AS NOTED

BREAK SHARP EDGES AND CORNERS .010 MAX

FINISH

CONTRACT NO.

DWN	Nadine Cason	12-9-80
ENGR	Thomas C. Mock	12-9-80
CHK	Joe D. Williams	12-10-80
PROD	L. W. Smith	12-30-80
APVD		
APVD		

Scientific-Atlanta 3845 Pleasantdale Road Atlanta, Georgia 30340

RECEIVER NPR (8000 and 50,000 pwp)

SIZE	FSCM NO.	DWG NO.	REV
A	10110	210784	

SCALE

SHEET 1 of 7

DWG NO. 210784 21

1.0 PURPOSE OF TEST

The purpose of this test is to measure the NPR when the C/T for the 8,000 pwp noise level is applied. The procedure is repeated for the 50,000 pwp noise level.

2.0 EQUIPMENT REQUIRED

The following equipment or equal is required:

1. Noise Generator/Receiver Marconi TF2091/2092
2. SA Test Exciter
3. RMS Voltmeter, HP3400
4. 75 ohm termination (2)
5. Power Meter, GM 454 or HP 435
6. 50 ohm to 75 ohm minimum loss adapter
7. Spectrum Analyzer

3.0 PROCEDURE

3.1 Calibration Procedure

Modulator Calibration

In order to get accurate NPR results it is important that the modulator is properly adjusted.

a. Measure the output frequency of the modulator with its input terminated. If not 70 MHz ± 20 kHz, adjust the frequency to within these limits.
b. From Table 1, record on the data sheet the format information. Input the frequency into the modulator at the level required to produce the first carrier null for the format used. Connect the output of the modulator to a spectrum analyzer and adjust the deviation control on the modulator for a first carrier null.

Scientific-Atlanta 3845 Pleasantdale Road Atlanta, Georgia 30340	SIZE A	FSCM NO. 10110	DWG NO. 210784	REV
DWN CNC	CHK J.O.W.	SCALE		SHEET 2

3.2 8000 PWP NPR TEST

This test verifies demod performance before threshold. If the clean carrier test was satisfactory, this test must also yield satisfactory results. If it does not, the test set-up and calibration should be re-checked as unsatisfactory results of this test will almost certainly be due to set-up errors, improper level setting, external RF or baseband interference, etc.

a. Switch the noise generator in the C/N test set on. Switch the TEU to IN.

b. Set the C/N test set such that the C/T level for 8000 pwp in Table 1 is met. To find the necessary C/No, use the following:

$$C/No = C/T + 228.6$$

Put the C/N test set in the C/No mode and set it for the necessary C/No. Read and record the NPR on the baseband noise receiver. The value should be greater than or equal to the value listed in Table 1. Typically the highest frequency slot will exhibit the worst NPR.

EXAMPLE: Twelve channels -

C/T for 8000 pwp = -154.7 dB/°k
C/No = C/T + 228.6 = 73.9 dB/Hz

3.3 50,000 PWP NPR TEST

This test confirms the operation of the TEU for channel capacities 12 - 432 channels. For greater than 432 channels, the 50,000 pwp C/T's should be met without a TEU. The tracking TEU loop filters (P/N 141425-141441) will allow 50,000 pwp C/T's to be met in all noise slots. Non-tracking loop filter boards will provide significant threshold extension in all noise slots but may not meet the 50,000 pwp C/T specifications found in Table 1 in all noise slots. If it is felt that

the TEU loop filter needs to be aligned test procedure 142257 for the tracking TEU loop filters should be followed. For non-tracking TEU loop filters only the phase-shift on the loop filter board should be adjusted (refer to the TEU section of the manual). In all cases after reqlignment of TEU loop filters at 50,000 pwp the 8000 pwp C/T's should be checked.

a. Be sure the TEU is switched in by setting the C/N meter reading to 6 dB using the "zero-on-noise" control.

b. Set the C/N test set such that the C/T for 50,000 pwp on Table 1 is met. To find the necessary C/No, use the following formula:

$$C/No = C/T + 228.6$$

Put the C/N test set in the C/No mode and set it for the necessary C/No. Read and record the NPR on the baseband noise receiver. The value of NPR should be greater than or equal to the value listed in Table 1. Typically, the highest frequency slot will exhibit the worst NPR.

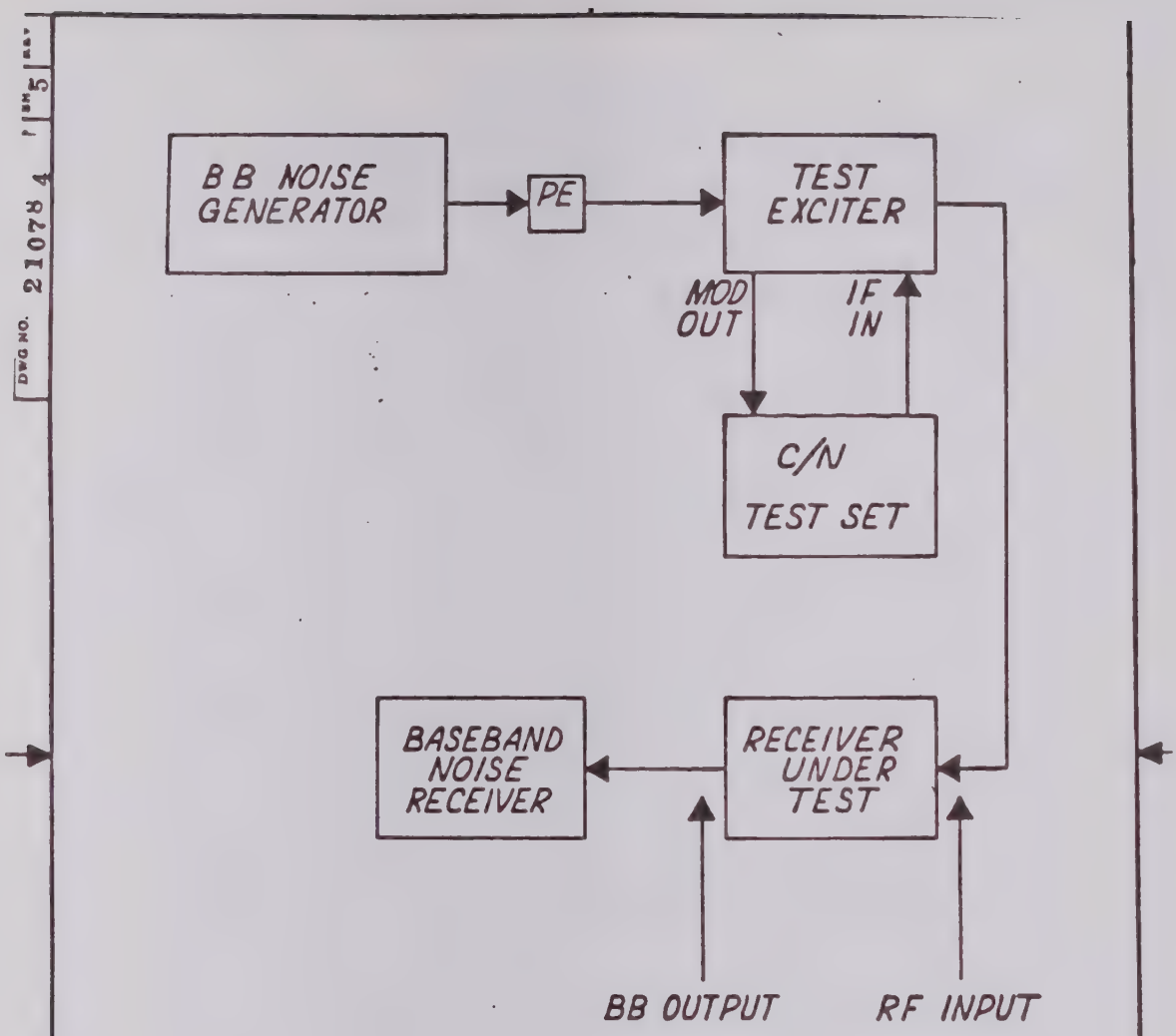

Figure 1

Test Set-up For NPR Measurement

Scientific-Atlanta 3845 Pleasantdale Road Atlanta, Georgia 30340	SIZE A	FSCM NO. 10110	DWG NO. 210784	REV
DWN Randy Harris	CHK J.D.W.	SCALE		SHEET 5

SA376-178

DWG NO. 210784 SH 6 REV

TEST DATA SHEET
Receiver NPR Tests

Model 411 WB (D) - 3.7-4.2 Receiver, Serial Number _____

Approved _____ Performed By _____

Witnessed _____

Para. 3.1.B Format Information:

Channel Capacity _____

IF Bandwidth _____ MHz

Test Tone Frequency _____ kHz

Test Tone Deviation _____ kHz,RMS

Multi-Channel Deviation _____ kHz,RMS

C/T for 8,000 pwp (Table 1) _____ dBw/°k

C/T for 50,000 pwp (Table 1) _____ dBw/°k

Required NPR values (Table 1):

8,000 pwp _____ dB

50,000 pwp _____ dB

Para. 3.2 8000 pwp NPR Test

		NPR
Top Slot	_____ kHz	_____ dB
Mid Slot	_____ kHz	_____ dB
Bottom Slot	_____ kHz	_____ dB

Para. 3.3 50,000 pwp NPR Test

		NPR
Top Slot	_____ kHz	_____ dB
Mid Slot	_____ kHz	_____ dB
Bottom Slot	_____ kHz	_____ dB

Scientific-Atlanta 3845 Pleasantdale Road Atlanta, Georgia 30340	SIZE A	FSCM NO. 10110	DWG NO. 210784	REV
DWN CNC	CHK J.O.W.	SCALE		SHEET 6

8A376-170

DWG NO. 210784 SH 7 REV

Channel Capacity	BW (MHz)	Top RF Freq (kHz)	Test Tone Freq (kHz)	Noise Load Ratio (dB)	Rms Test Deviation (kHz)	Rms MC Deviation (kHz)	Loaded into S.A Mod (150 kHz/.40 dBm) TT Deviation (dBm)	RMS Deviation (dBm)	Int Cos Null @ TT Freq	S/N + N/R + (dB)	RX Max Sig Level (dBm)	8000 ppm C/T	MPR 8000 ppm	10,000 ppm C/T	MPR 10,000 ppm
12	1.25	60	36.48	3.32	109	159	-42.17	-38.85	-47.07	8.57	-47	-154.7	39.90	-160.7	31.94
24	2.5	108	65.66	+ 4.52	164	275	-38.63	-34.11	-41.96	10.39	-45	-153.0	38.11	-159.0	30.11
36	2.5	156	94.85	+ 5.23	168	307	-38.42	-33.18	-38.77	11.44	-45	-150.0	37.06	-156.0	29.06
60	2.5	252	153.2	6.11	136	276	-40.25	-34.14	-34.61	12.78	-45	-144.0	35.72	-150.0	27.72
60	5.0	252	153.2	6.11	270	546	-34.30	-28.19	-34.61	12.78	-42	-149.9	35.72	-155.9	27.72
72	2.5	300	182.4	6.43	125	261	-40.98	-34.55	-33.09	13.25	-45	-141.7	35.25	-147.7	27.25
72	5.0	300	182.4	6.43	294	616	-33.56	-27.12	-33.09	13.25	-42	-149.1	35.25	-155.1	27.25
96	5.0	408	248.1	6.93	263	584	-34.52	-27.59	-30.42	14.13	-42	-145.5	34.37	-151.5	26.37
96	7.5	408	248.1	6.93	360	799	-31.80	-24.87	-30.42	14.13	-40	-148.2	34.37	-154.2	26.37
132	5.0	552	335.6	7.48	223	529	-35.96	-28.48	-27.79	14.93	-42	-141.4	33.57	-157.4	25.57
132	7.5	552	335.6	7.48	376	891	-31.42	-23.94	-27.79	14.93	-40	-145.9	33.57	-151.9	25.57
132	10.0	552	335.6	7.48	430	1020	-30.25	-22.77	-27.79	14.93	-39	-147.1	33.57	-153.1	25.57
192	5.0	804	488.8	8.13	188	459	-37.82	-29.69	-24.53	15.94	-42	-136.3	32.56	-142.3	24.56
192	7.5	804	488.8	8.13	297	758	-33.47	-25.34	-24.53	15.94	-40	-140.6	32.56	-146.6	24.56
192	10.0	804	488.8	8.13	457	1167	-29.72	-21.59	-24.53	15.94	-39	-144.4	32.56	-150.4	24.56
252	7.5	1052	639.6	9.01	260	733	-34.62	-25.61	-22.19	16.25	-40	-137.1	32.25	-143.1	24.25
252	10	1052	639.6	9.01	358	1009	-31.84	-22.83	-22.19	16.25	-39	-139.9	32.25	-145.9	24.25
252	15	1052	639.6	9.01	577	1627	-27.70	-18.69	-22.19	16.25	-37	-144.1	32.25	-150.1	24.25
312	10	1300	790.4	9.94	320	1005	-32.82	-22.88	-20.35	16.25	-39	-137.1	32.25	-143.1	24.25
312	15	1300	790.4	9.94	546	1716	-28.17	-18.23	-20.35	16.25	-36	-141.7	32.25	-147.7	24.25
432	15	1796	1092	11.35	401	1479	-30.86	-19.51	-17.55	16.25	-37	-136.2	32.25	-142.2	24.25
432	17.5	1796	1092	11.35	517	1919	-28.65	-17.30	-17.55	16.25	-37	-138.5	32.25	-144.5	24.25
432	20	1796	1092	11.35	616	2276	-27.13	-15.78	-17.55	16.25	-36	-139.9	32.25	-145.9	24.25
432	25	1796	1092	11.35	729	2688	-25.67	-14.32	-17.55	16.25	-35	-141.4	32.25	-147.4	24.25
612	20	2540	1544	12.87	454	1996	-29.78	-16.91	-14.54	16.25	-36	-134.2	32.25	-140.2	24.25
792	20	3284	1997	13.99	356	1784	-31.89	-17.90	-12.30	16.24	-36	-129.9	32.26	-135.9	24.26
792	25	3284	1997	13.99	499	2494	-28.96	-14.97	-12.30	16.24	-35	-132.8	32.26	-138.8	24.26
972	25	4028	2449	14.88	410	2274	-30.67	-15.79	-10.53	16.24	-35	-129.4	32.26	-135.4	24.26
972	36	4028	2449	14.88	801	4417	-24.84	- 9.96	-10.53	16.24	-34	-135.2	32.26	-141.7	24.26
1092	36	4892	2974	15.38	701	4118	-26.01	-10.62	- 8.84	16.59	-34	-132.4	31.91	-138.4	23.91
1332	36	5884	3577	16.25	591	3834	-27.49	-11.24	- 7.24	16.52	-34	-129.3	31.98	-135.3	23.98
1872	36	8120	4937	17.72	419	3181	-30.48	-12.75	- 4.44	16.46	-34	-123.5	32.04	-129.5	24.04

Scientific-Atlanta 3845 Pleasantdale Road Atlanta, Georgia 30340

SIZE A | FSCM NO. 10110 | DWG NO. 210784 | REV

DWN CNC | CHK JDW | SCALE | SHEET 7

33R061C

5-37/5-38

APPLICATION		REVISIONS			
NEXT ASSY	USED ON	SYM	DESCRIPTION	DATE	APPROVED
		B	General Revision	4/14/76	H. Wegener

REV																														
SHEET																														
REV STATUS	REV																													
OF SHEETS	SHEET																													

ALL DIMENSIONS ARE IN INCHES UNLESS OTHERWISE SPECIFIED

TOLERANCES
3 PLACE DECIMALS ±.005
2 PLACE DECIMALS ±.02
1 PLACE DECIMAL ±.1

FRACTIONS ± ANGLES ±0°30'

.X SURFACE ROUGHNESS 125 ALL MACHINED SURFACES EXCEPT AS NOTED

BREAK SHARP EDGES AND CORNERS .010 MAX

FINISH

CONTRACT NO.

DWN Andrew Giordano 8/1/75
ENGR H. Wegener 8-1-75
CHK H. Wegener 8-1-75
PROD

APVD H. Wegener 8-1-75
APVD

Scientific-Atlanta, Inc.
3845 Pleasantdale Road, Atlanta, Georgia 30340

VIDEO TESTS
411 WB RECEIVER

SIZE	CODE IDENT NO.	DRAWING NO.
A	10110	142231

SCALE | REV | SHEET 1 of 15

1.0 Purpose of Test

The purpose of these tests is to verify the following receiver specifications:

A. Baseband Flatness
B. Differential Gain and Differential Phase
C. Field-Time Waveform Distortion
D. Line-Time Waveform Distortion
E. Short-Time Waveform Distortion
F. Chrominance to Luminance Delay (from which Envelope Delay can be calculated).
G. Continuous Random Noise

2.0 Equipment Required

The following table lists test equipment required (exact equivalents may be used) and provides space for recording equipment information.

TEST EQUIPMENT

Equipment Description	Manufacturer/ Model Number	Serial Number	Calibration Expiration Date
Video Signal Generator	Tektroniz/149A (NTSC) Tektronix/148A (PAL)		
Baseband Signal Generator (2 req.)	Hewlett-Packard/ 651		
Pre-Emphasis Network	Wandel & Goltermann		
70-MHz Wideband FM Modulator	Scientific-Atlanta		
70 MHz to 3.7-4.2 GHz Upconverter	Scientific-Atlanta		
RMS Voltmeter	Hewlett-Packard/ 3400		
Waveform Monitor	Tektronix/1485A		
Vectorscope	Tektronix/ Model 520A (NTSC) Model 521A (PAL)		

SIZE	CODE IDENT NO	DRAWING NO.
A	10110	142231
SCALE	REV	SHEET 2 of 15

TEST EQUIPMENT - Continued

Equipment Description	Manufacturer/ Model Number	Serial Number	Calibration Expiration Date
Oscilloscope	Tektronix/Model 454		
Broadband IF Noise Source	Scientific-Atlanta		
75 ohm 2-way power combiner	Scientific-Atlanta		
50 ohm termination	Tektronix/011-040		
75 ohm termination	Tektronix/011-055		
50 - 75 ohm adapter	ELCOM/(RT50M/75F)		
Power Meter	General Microwave/ 454A		
Step attenuators			
0-1 dB	Texscan/RA 73		
0-10 dB	Texscan/RA 70		
0-70 dB	Texscan/RA 71		
30 dB RF Attenuator			
Video Lowpass Filter 4 kHz High-Pass Filter 4 kHz Low-Pass Filter	Tektronix/015-0202-00		
Noise Weighting	Tektronix/015-0214-00		

3.0 Preliminary Calibration

A. Modulator Sensitivity Calibration

The test modulator should be adjusted for 140 KHz/-40 dBm sensitivity

1. Input a signal at a frequency of 82.31 KHz and -40 dBm level into the modulator.
2. Adjust the modulator sensitivity control to obtain the first carrier null on a spectrum analyser.

B. The following rules must be observed in conducting all video tests:

1. Use the shortest possible cables for all connections.

SIZE	CODE IDENT NO.	DRAWING NO.
A	10110	142231
SCALE	REV	SHEET 3 of 15

2. Use all 75 ohm cables except for the RF cables. The RF cables must have excellent characteristics at 4 GHz and are 50 ohm impedance.

3. When loop-through devices are used only the last display in a series string should be terminated.

4.0 Video Tests

A minimum of one hour warm-up is required for all equipment prior to beginning testing. For Tests A through I, the equipment is set up as in Figure 1.

A. Baseband Flatness and Deviation Adjustment

The purpose of this test is to properly set the video deviation using a test tone frequency of the same peak-to-peak level as the video input.

1. Determine the peak-to-peak level of a full amplitude multiburst signal out of the video signal generator. Use a high frequency oscilloscope terminated in 75 ohms. Record the peak-to-peak value on the data sheet.

2. Record the format number from Table 1. Input the test tone frequency to the pre-emphasis network at the same peak-to-peak level as recorded in step 1. Adjust the step attenuators to provide the peak-to-peak level at the output of the pre-emphasis network indicated in Table 1. (The test tone levels may be adjusted on an RMS voltmeter by using the RMS values of Table 1.) Record this level on the data sheet .

3. Check the baseband signal generator and the RMS voltmeter back to back and record deviations from a flat response at the frequencies data will be recorded. Record on the data sheet the frequency to which the amplitude response measurements are referenced.

SIZE	CODE IDENT NO.	DRAWING NO
A	10110	142231
SCALE	REV	SHEET 4 of 15

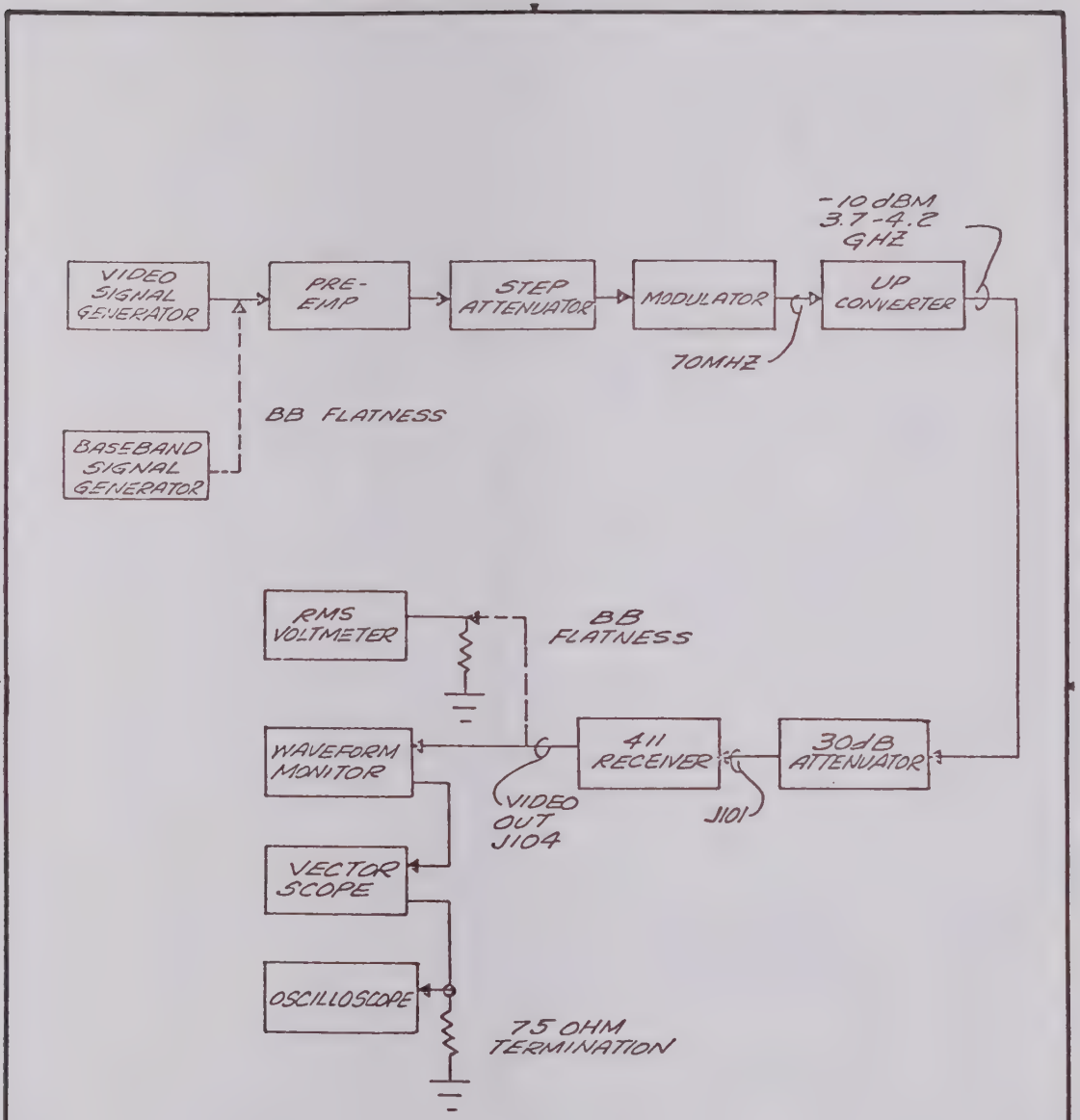

Figure 1. Test Equipment Set-Up

SCIENTIFIC-ATLANTA, INC. SATELLITE COMMUNICATIONS DIVISION	SIZE A	CODE IDENT NO 10110	DRAWING NO 142231
	SCALE	REV	SHEET 5 of 15

TABLE 1. DEVIATION INFORMATION

Format Number	IF Bandwidth (MHz)	Television Standard	Pre-Emphasis Cross-over Frequency (F_x) (MHz)	Peak-to-Peak Deviation at F_x (MHz) *	Peak-to-Peak Level Required into the modulator (into 75 ohms) at F_x (Volts peak-to-peak) *	Equivalent RMS voltage required into the modulator (into 75 ohms) at F_x (VOLTS RMS)
1	17.5	525/60	.7616	15.0	.294	.104
2	17.5	625/50	1.512	15.0	.294	.104
3	30	525/60	.7616	21.5	.421	.149
4	30	625/50	1.512	18.1	.354	.125
5	36	525/60	.7616	22	.430	.152
6	36	625/50	1.512	22	.430	.152

*Note: For deviations other than those in Table 1, the following formula should be used to determine the peak-to-peak level into the modulator.

$$V\ p\text{-}p = \frac{\Delta\ Fp\text{-}p}{39.6} \times (.7748)$$

Where V p-p = peak-to-peak, voltage level into modulator (75 ohms).

Δ F p-p = required peak-to-peak test tone deviation (MHz).

SIZE A | CODE IDENT NO 10110 | DRAWING NO 142231 | REV | SCALE | SHEET 6 of 15

4. Switch the clamp off. Set the video signal generator to F_x, the cross over frequency. Reduce the level of the baseband signal generator to 0.5 V p-p. Adjust the DEMOD BB LEVEL for 0.3 V and the VIDEO LEVEL and BASEBAND LEVEL on the receiver modules for 0.5 volt p-p as noted on multifunction meter when the multifunction siwtch is in DEMOD BB, BB1 and BB2 positions respectively. Adjust the VIDEO LEVEL slightly to get a convenient upscale reference on the RMS voltmeter at the reference frequency. Record the corrected baseband flatness (actual reading minus the back to back deviation from a flat response).

B. Differential Phase and Gain

1. Switch the clamp on.
2. Input the full amplitude multiburst signal into the pre-emphasis network. Adjust the VIDEO LEVEL control on the receiver as required to get a full 140 IRE display on the waveform monitor.
3. Switch the video signal generator to linearity, 10 steps and subcarrier on.
4. Switch the vectorscope to CH. B, FULL FIELD and Aϕ with CHB gain switch to max.
5. Press the VECTOR button. Use the A phase control to align the staircase vector at 180° (to left of center on the horizontal line). Check that the origin of the staircase vector coincides with the vector graticule center. If not, adjust VERT-POSITION CLAMP and HORIZONTAL-POSITION CLAMP CONTROLS on the vectorscope.
6. Adjust CH. B GAIN control if required to get the vector tip on the edge of the circle.
7. Press DIFF-GAIN button and record the differential gain.
8. Press DIFF-PHASE button and use the calibrated phase control to read the differential phase. Record this data.

SIZE	CODE IDENT NO.	DRAWING NO.
A	10110	142231
SCALE	REV	SHEET 7 of 15

C. Field-Time Waveform Distortion

1. Switch the Video Signal Generator to WINDOW.
2. Set the Waveform Monitor Horizontal Display to "2 FIELD".
3. Record the percentage of tilt of the field rate display.

D. Line-Time Waveform Distortion

1. Switch the Video Signal Generator to WINDOW.
2. Set the Waveform Monitor Horizontal Display to "2 LINE, MAG X1".
3. Record the percentage of tilt of the line rate display.

E. Short-Time Waveform Distortion

1. Switch the Video Signal Generator to SIN^2 PULSE & BAR.
2. Set the waveform monitor display to MAG x 25.
3. Observe the amplitude of the first lobe (negative) leading or trailing of the 2T sin^2 pulse.

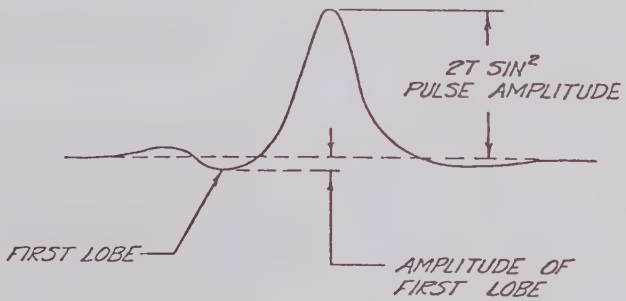

Figure 2. 2T SIN^2 Pulse

4. Record the percentage of the lobe amplitude relative to the full amplitude of the 2T sin^2 pulse.

SIZE	CODE IDENT NO.	DRAWING NO.
A	10110	142231
SCALE	REV	SHEET 8 of 15

F. Chrominance to Luminance Delay (Envelope Delay)

1. Switch the video generator to "SIN^2 PULSE AND BAR".
2. Set the waveform monitor to 0.25H/CM. Observe that the Sin^2 pulses are of the same amplitude as the bar portion.
3. Determine the half-amplitude duration (h. a. d.) of the sin^2 pulse. Observe the peak-to-peak envelope ripple at the baseline and record. With relative gain errors normalized or in effect cancelled, both the positive and negative peaks of the baseline sinusoid on the modulated sine-squared pulse are equal amplitude and the delay in nanoseconds may be determined as follows:

COLOR SUBCARRIER = 3.58 MHz	τ = 10d;	FOR 12.5T Modulated Sine-Squared Pulse whose h.a.d. = 1.57 μ s.
	τ = 15.9d;	FOR 20T Modulated Sine-Squared Pulse whose h.a.d = 2.5 μ s.
COLOR SUBCARRIER = 4.43 MHz	τ = 12.7d;	FOR 20T Modulated Sine-Squared Pulse whose h.a.d. = 20 μ s.
	τ = 6.4d;	FOR 10T Modulated Sine-Squared Pulse whose h.a.d. = 1.0 μ s.

WHERE, τ = DELAY in ns.
d = P-P amplitude of baseline deviation in IRE units with modulated sine-squared pulse amplitude set to 100 IRE units and gain errors normalized.

Calculate the envelope delay and record.

SCIENTIFIC-ATLANTA, INC. SATELLITE COMMUNICATIONS DIVISION	SIZE A	CODE IDENT NO 10110	DRAWING NO 142231
	SCALE	REV	SHEET 9 of 15

G. Continuous Random Noise

1. Set the equipment up as shown in Figure 3.

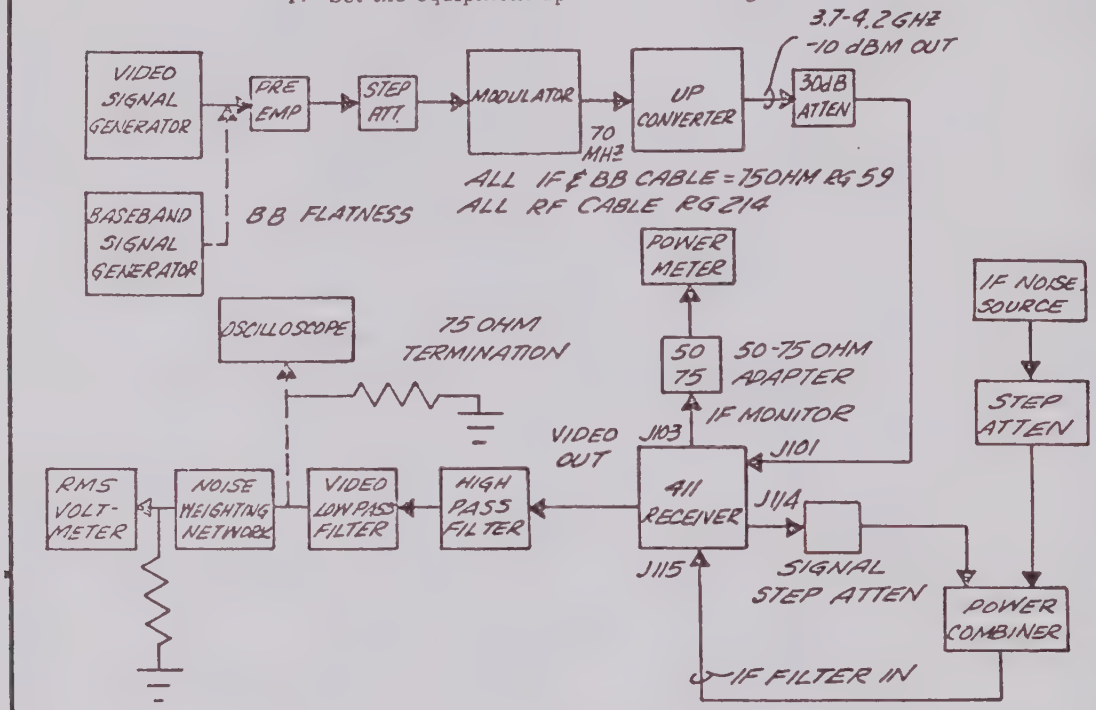

Figure 3. Continuous Random Noise Test Set-up

	SIZE	CODE IDENT NO	DRAWING NO.
	A	10110	142231
	SCALE	REV	SHEET 10 of 15

2. Insert a filter in the receiver filter position which has its noise bandwidth calibrated.

3. Record the IF filter noise bandwidth. Calculate C/T for a 0 dB C/N using the following equation:

$$C/T\left(\frac{dBW}{^\circ K}\right) = -228.6 + 10\log\left(B_N\right) + C/N$$

where B_N = IF filter noise bandwidth (Hz)

C/N = measured carrier-to-noise level (dB)

4. Set the signal attenuator to 20 dB. Set the noise attenuator to Z_o (terminated).

5. Switch the receive IF amplifier to the MGC position. Adjust the receiver IF amplifier MGC potentiometer for a -13 dB reference reading on the power meter.

6. Set the signal attenuator to Z_o (terminated). Switch the noise attenuator to 10 dB.

7. Adjust the noise output level until the power meter reading returns to its -13 dBm reference.

8. Switch the signal attenuators to 20 dB and check that the power meter level increases to -10 dBm ±0.2 dB. The 20 dB signal attenuation setting now corresponds to a 0 dB C/N ratio.

9. Switch the receiver IF amplifier to AGC mode. Set the signal step attenuator to Z_o and zero the receiver C/N meter.

10. Set the noise attenuator to Z_o and adjust the signal attenuator to 0.

11. Switch the video signal generator to multiburst. Observe the level of the white reference pulse at the output of the low pass filter on an oscilloscope terminated in 75 ohms. Record the peak-to-peak white reference pulse amplitude. Connect the output of the low pass filter to the noise weighting network.

12. Terminate the input to the modulator. Record the appropriate correction factor. Adjust the signal step attenuator to get the C/T levels on the data sheet. For each C/T level record the noise level in volts rms. Compute the signal-to-noise ratio using the following equation:

$$S/N = 20 \log \left(\frac{V_{WR}}{V_{\text{noise rms}}} \right)$$

where S/N uncorrected signal-to-noise

V_{WR} = P-P voltage level of the white reference pulse

$V_{\text{noise rms}}$ = rms noise level

This equation gives a signal-to-noise ratio not including the correction factor. Record the signal-to-noise value with correction factors added in.

SCIENTIFIC-ATLANTA, INC. SATELLITE COMMUNICATIONS DIVISION	SIZE A	CODE IDENT NO 10110	DRAWING NO 142231
	SCALE	REV	SHEET 12 of 15

Test Data Sheet

Video Tests
Model 411 WB(D) 3.7 - 4.2 Video Receiver
Serial Number _____
Test Conducted By:_____
Date:_____
Approved _____
Witnessed_____

Para. Ref.

3.0 Preliminary Calibration — Comments

A. Modulator sensitivity calibrated
_____check OK

4.0 Video Tests

A. BB Flatness and Deviation Adjustment

A1. Full amplitude Multiburst
peak-to-peak level_____Vp-p

A2. Format Number_____

F_x (test tone frequency)_____MHz
Test Tone Deiviation_____MHz p-p
Vp-p@ F_x into modulator_____Vp-p

A3. Reference Frequency_____kHz

A4. Baseband Frequency Response (required flatness is ±0.25 dB with respect to reference frequency level). _____

Frequency (Hz)	Back-to-Back Deviation From a Flat Response	Corrected Flatness (dB)
_____	_____	_____
_____	_____	_____
_____	_____	_____
_____	_____	_____

SCIENTIFIC-ATLANTA, INC. SATELLITE COMMUNICATIONS DIVISION	SIZE A	CODE IDENT NO 10110	DRAWING NO 142231
	SCALE	REV	SHEET 13 Of 15

Frequency (Hz)	Back-to-Back Deviation From a Flat Response	Corrected Flatness (dB)	Comments

B. Differential Phase and Gain — Req.

B.7 Differential Phase _____ < 1.0

B.8 Differential Gain _____ % < 4%

C. Field-Time Waveform Distortion

C.3 Field Tilt _____ % < 1%

D. Line-Time Waveform Distortion

D.3 Line Tilt _____ % < 0.5%

E. Short-Time Waveform Distortion

E.4 2T $\sin^2$ Pulse 1st Lobe Amplitude (relative to 2T pulse amplitude) _____ % < 4%

F. Chrominance to Luminance Delay

F.3 Baseline ripple (peak-to-peak) _____ IRE Units <3

Envelope delay _____ ns < 30 ns

SCIENTIFIC-ATLANTA, INC. SATELLITE COMMUNICATIONS DIVISION	SIZE A	CODE IDENT NO 10110	DRAWING NO 142231
	SCALE	REV	SHEET 14 of 15

G. Continuous Random Noise

G.3 IF filter noise BW_____MHz

C/T for 0 dB C/N_____(dBw/°K)

G.11 White reference pulse amplitude

	Required
_____Vp-p	.71±.1Vp-p

G.12 Correction factor_____dB

C/T (dBw/°K)	Noise level (V rms)	S/N (with Correction factor) dB	Required

SCIENTIFIC-ATLANTA, INC. SATELLITE COMMUNICATIONS DIVISION	SIZE A	CODE IDENT NO 10110	DRAWING NO 142231
	SCALE	REV	SHEET 15 of 15

APPLICATION		REVISIONS			
NEXT ASSY	USED ON	SYM	DESCRIPTION	DATE	APPROVED

REV																									
SHEET																									
REV STATUS	REV																								
OF SHEETS	SHEET																								

ALL DIMENSIONS ARE IN INCHES UNLESS OTHERWISE SPECIFIED

TOLERANCES
3 PLACE DECIMALS ± .005
2 PLACE DECIMALS ± .02
1 PLACE DECIMAL ± .1

FRACTIONS ± ANGLES ± 0°30

.X SURFACE ROUGHNESS 125
ALL MACHINED SURFACES EXCEPT AS NOTED

BREAK SHARP EDGES AND CORNERS .010 MAX

FINISH

CONTRACT NO

DWN	[signature]	3-25-76
ENGR	[signature]	4/12/76
CHK	[signature]	3/15
PROD		
APVD	[signature]	4-14-76
APVD		

Scientific-Atlanta, Inc.
3845 Pleasantdale Road, Atlanta, Georgia 30340

ALIGNMENT PROCEDURE
THRESHOLD EXTENSION UNIT P/N 141423
AND LOOP FILTER

SIZE	CODE IDENT NO	DRAWING NO
A	10110	142257

SCALE	REV	SHEET 1 of 7

1.0 SCOPE

The following procedure is to be used to verify proper operation of a complete TEU assembly. Use Scientific-Atlanta Test Procedure 132332 to verify proper alignment and operation of the TEU and loop filter prior to optimizing the complete assembly.

2.0 TEST EQUIPMENT REQUIRED

The following test equipment, or its equivalent, is required to perform this procedure:

Description	Manufacturer/Model No.
Noise Generator	Marconi TF2091B
Test Modulator	W. U. G. ZFM-70
Test Upconverter	Scientific-Atlanta Model 461
Loop Translator	Scientific-Atlanta
Noise Receiver	Marconi TF2092B
RMS Voltmeter	HP 3400A
Noise Source, with (2) each IF Amplifiers, Calibrated Noise Bandwidth Filter, and Power Combiner	Scientific-Atlanta
Step Attenuators; 0-70 dB,	Texscan Corp.
10 dB Steps, (2) ea.; 0-10 dB	RA71
1 dB Steps, (2) ea.; 0-1 dB,	RA70
0.1 dB Steps, (2) ea.	RA73
Power Meter	HP 435A

3.0 ALIGNMENT AND TEST PROCEDURE

3.1 Clean Carrier

a. Install proper loop filter into TEU for channel capacity desired. Switch TEU to out.

b. Set up equipment as shown in figure 1.

c. Install high and low pass filters and noise slots in Marconi Noise Generator for channel capacity to be tested.

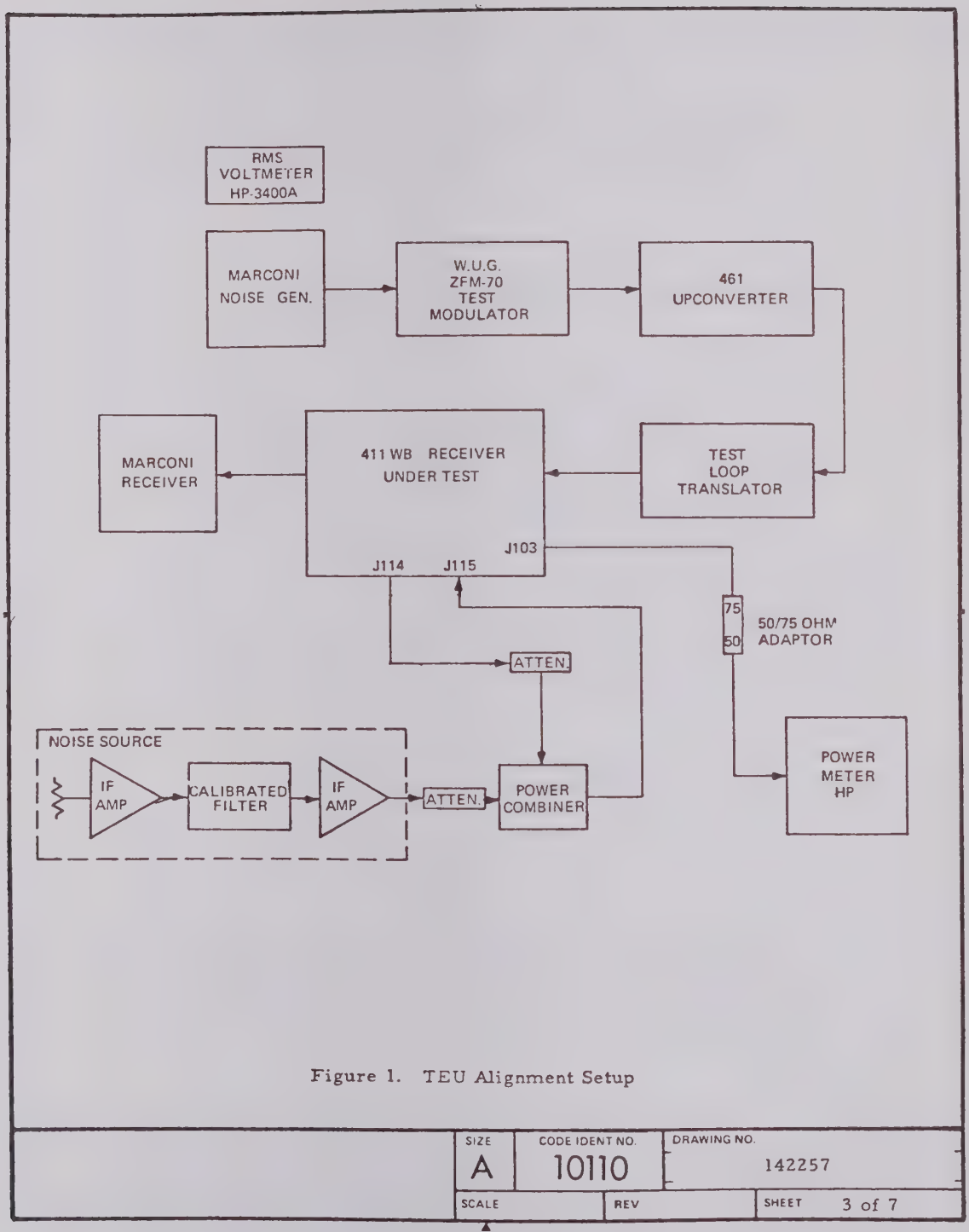

Figure 1. TEU Alignment Setup

	SIZE	CODE IDENT NO.	DRAWING NO.
	A	10110	142257
	SCALE	REV	SHEET 3 of 7

d. Set output of Marconi Generator to obtain proper deviation of the ZFM-70 modulator. Set reference of Marconi receiver in all three slots.

e. Switch in low slot and check NPR. Adjust C37 of TEU for maximum NPR.

f. Check all slots for proper NPR.

3.2 50,000 PWP and 8,000 PWP Levels

a. Remove IF filter from radio and insert jumper module. Switch AGC/MGC switch on IF Amp to MGC.

b. Terminate noise source at attenuators. Set level on power meter to -23 dBm using manual gain control of the IF Amp. This level includes the 6 dB loss of the impedance matching transformer.

c. Terminate signal line at attenuators and unterminate noise source attenuators. Set level on power meter to -23 dBm using manual gain controls of IF Amp in the noise source.

d. Unterminate both attenuators. Power meter reads -20 dBm (±0.4).

e. Terminate signal line. Remove jumper module and replace with the IF Filter. Switch the IF Amp to AGC. Adjust the ZERO-ON-NOISE control to zero the C/N meter.

f. Calculate C/T of attenuator setting using the following formula:

$$C/T \left(\frac{dBw}{^\circ K}\right) = -228.6 + 10 \log \left(B_N\right) + C/N$$

where B_N = IF Filter noise bandwidth (Hz)

C/N = 0 in this procedure

g. Obtain the required C/T for 50,000 PWP from table 1. Subtract from C/T obtained in step f. Add or subtract difference from signal attenuators. (Example: If C/T obtained in step f is -160 and the 50,000 PWP C/T is -150 then the signal attenuation should be reduced by 10 dB).

SCIENTIFIC-ATLANTA, INC. SATELLITE COMMUNICATIONS DIVISION	SIZE A	CODE IDENT NO 10110	DRAWING NO 142257
	SCALE	REV	SHEET 4 of 7

i. Obtain required NPR for 50,000 PWP from table 1 and set into Marconi receiver.

j. Switch TEU to IN. Adjust R6, R7 and C1 in order to obtain a null on meter of Marconi Noise Receiver. Adjust all three controls until minimum null has been obtained.

Note

Check that R6 will adjust completely through null. False null can be obtained at end of control.

k. If NPR cannot be obtained, setting of signal attenuator can be raised or lowered 1 dB. Add or subtract this to the C/T for 50,000 PWP for each slot to obtain required NPR.

l. If NPR cannot be obtained using ±1 dB tolerance allowed, AT1 and/or AT2 will have to be changed. To determine whether to increase or decrease value of AT1, note reading of S/N meter. Increase reading of meter using ZERO-ON-NOISE control on the receiver IF amp. If null on Marconi increases, AT1 must be lowered in value. If null decreases, lower S/N meter reading below initial reading. If null increases, raise value of AT1. If no significant change occurs do not change value of AT1.

Note

Return S/N meter to original reading and repeat step k and l for each value of AT1.

m. Change value of AT2 one value up or down and repeat step k and l until required NPR is obtained.

n. Lower value of signal attenuators 6 dB to obtain 8000 PWP level. Check NPR of each slot for the NPR reading shown in Table 1.

o. Repeat step b and e. Readjust C37 to obtain maximum NPR. This will not affect 8,000 and 50,000 PWP levels.

SCIENTIFIC-ATLANTA, INC. SATELLITE COMMUNICATIONS DIVISION	SIZE A	CODE IDENT NO 10110	DRAWING NO 142257
	SCALE	REV	SHEET 5 of 7

Table 1

Channel Capacity	BW (MHz)	Top BB Freq. (kHz)	Test-Tone Freq. (kHz)	Noise Load Ratio (dB)	RMS Test-Tone Devia. (kHz)	RMS MC Devia. (kHz)	S/N= NPR+ (dB)	8000 PWP 0 C/T	NPR 8000 PWP	50,000 PWP 0 C/T	NPR 50,000 PWP
Intelstat											
24	2.5	108	65.66	+4.52	164	275	10.39	-153.0	38.11	-159.0	30.11
36	2.5	156	94.85	+5.23	168	307	11.44	-150.0	37.06	-156.0	29.06
60	2.5	252	151.2	+6.11	136	276	12.78	-144.0	35.72	-150.0	27.72
60	5.0	252	153.2	+6.11	270	546	12.78	-149.9	35.72	-155.9	27.72
72	2.5	300	182.4	+6.43	125	261	13.25	-141.7	35.25	-147.7	27.25
72	5.0	300	182.4	+6.43	294	616	13.25	-149.1	35.25	-155.1	27.25
96	5.0	408	248.1	+6.93	263	584	14.13	-145.5	34.37	-151.5	26.37
96	7.5	408	248.1	+6.93	360	799	14.13	-148.2	34.37	-154.2	26.37
132	5.0	552	335.6	+7.48	223	529	14.93	-141.4	33.57	-157.4	25.57
132	7.5	552	335.6	+7.48	376	891	14.93	-145.9	33.57	-151.9	25.57
132	10.0	552	335.6	+7.48	430	1020	14.93	-147.1	33.57	-153.1	25.57
192	5.0	804	488.8	+8.13	180	459	15.94	-136.3	32.56	-142.3	24.56
192	7.5	804	488.8	+8.13	297	758	15.94	-140.6	32.56	-146.6	24.56
192	10.0	804	488.8	+8.13	457	1167	15.94	-144.4	32.56	-150.4	24.56
252	7.5	1052	639.6	+9.01	260	733	16.25	-137.1	32.25	-143.1	24.25
252	10.0	1052	639.6	+9.01	358	1009	16.25	-139.9	32.25	-145.9	24.25
252	15.0	1052	639.6	+9.01	577	1627	16.25	-144.1	32.25	-150.1	24.25
312	10.0	1300	790.4	+9.94	320	1005	16.25	-137.1	32.25	-143.1	24.25
312	15.0	1300	790.4	+9.94	546	1716	16.25	-141.7	32.25	-147.7	24.25
432	15.0	1796	1092	+11.35	401	1479	16.25	-136.2	32.25	-142.2	24.25
432	17.5	1796	1092	+11.35	517	1919	16.25	-138.5	32.25	-144.5	24.25
432	20.0	1796	1092	+11.35	616	2276	16.25	-139.9	32.25	-145.9	24.25
432	25.0	1796	1092	+11.35	729	2688	16.25	-141.4	32.25	-147.4	24.25
612	20.0	2540	1544	+12.87	454	1996	16.25	-134.2	32.25	-140.2	24.25
792	20.0	3284	1997	+13.99	356	1784	16.24	-129.9	32.26	-135.9	24.26
792	25.0	3284	1997	+13.99	499	2494	16.24	-132.8	32.26	-138.8	24.26
972	25.0	4028	2449	+14.88	410	2274	16.24	-129.4	32.26	-135.4	24.26
972	36.0	4028	2449	+14.88	802	4417	16.24	-135.2	32.26	-141.7	24.26
1092	36.0	4892	2974	+15.38	701	4118	16.59	-132.4	31.91	-138.4	23.91
1332	36.0	5884	3577	+16.25	591	3834	16.52	-129.3	31.98	-135.3	23.98
1872	36.0	8120	4937	+17.77	419	3181	16.46	-123.5	32.04	-129.5	24.04

SCIENTIFIC-ATLANTA, INC. SATELLITE COMMUNICATIONS DIVISION	SIZE A	CODE IDENT NO 10110	DRAWING NO 142257
	SCALE	REV	SHEET 6 of 7

Table 1 - continued

Channel Capacity	BW (MHz)	Top BB Freq. (kHz)	Test-Tone Freq. (kHz)	Noise Load Ratio (dB)	RMS Test-Tone Devia. (kHz)	RMS MC Devia. (kHz)	S/N= NPR+ (dB)	8000 PWP 0 C/T	NPR 8000 PWP	50,000 PWP 0 C/T	NPR 50,000 PWP
Specials											
12	1.5	60	36.48	+3.32	118	173	8.58	-155.1	39.9	-161.1	31.9
24	2.5	108	65.66	+4.52	164		10.4	-152.8	38.1	-158.8	30.1
36	3.0	156	94.85	+5.23	206	376	11.44	-151.6	37.0	-157.6	29.0
36a	3.5	204	124.0	+5.23	245	447	11.44	-150.8	37.0	-156.8	29.0
60	4.5	252	153.2	+6.11	270	546	12.78	-149.8	35.7	-155.8	27.7
72	5.0	300	182.4	+6.43	302	633	13.25	-149.2	35.2	-155.2	27.2
84	6.0	360	218.9	+6.70	338	731	13.80	-148.7	34.7	-154.7	26.7
108	7.5	456	277.2	+7.13	388	882	14.43	-147.8	34.1	-153.8	26.1
120	8.0	504	306.4	+7.32	412	957	14.69	-147.4	33.8	-153.4	25.8
144	9.0	612	372.1	+7.63	461	1110	15.24	-146.7	33.3	-152.7	25.3
180	10.5	756	459.6	+8.02	485	1221	15.78	-144.9	32.7	-150.9	24.7
360	20.0	1500	912.0	+10.56	695	2341	16.25	-142.1	32.2	-148.1	24.2
600	32.0	2540	1544	+12.78	869	3785	16.25	-139.5	32.2	-145.5	24.2
612	36	2540	1544	+12.87	1036	4558	16.25				

SCIENTIFIC-ATLANTA, INC. SATELLITE COMMUNICATIONS DIVISION	SIZE A	CODE IDENT NO 10110	DRAWING NO 142257
	SCALE	REV	SHEET 7 of 7

SECTION 6
REPLACEMENT PARTS LISTS

6.1 GENERAL

This section contains a replacement parts list for the mainframe. Replacement parts lists for each of the modules are found in the individual section for that module in this instruction manual.

6.2 EXPLANATION OF COLUMN HEADINGS

Ref Desig: The component designation of the part as called out on the schematic diagram.

S-A Part No. : Scientific-Atlanta's stock number. If no FSCM or manufacturer's part no. is given for this part, Scientific-Atlanta, Inc., is sole source. If a manufacturer is listed, his part may be used as a replacement if desired.

Description: Self explanatory.

FSCM: Federal Supply Code for Manufacturers. The code numbers are from the Federal Supply Code for Manufacturers, Cataloging Handbooks H4-1 (Name to Code) and H4-2 (Code to Name) effective on the publication date of this manual. Alphabetical codes have been arbitrarily assigned to manufacturers to identify those not appearing in the H4 handbooks. Identifying codes are cross-referenced (code to name) at the end of each list.

Mfr. Part No. : The number assigned to the part by its manufacturer is listed here. In some cases, this number may be a series or Government Standard number, which means that any part in the series, or one conforming to the standard, may be used.

6.3 ORDERING PARTS

The following information should be included on all inquiries and orders for replacement parts:

a. Scientific-Atlanta reference number*

b. Scientific-Atlanta part number

c. Part description

d. Using assembly name**

e. Using assembly model or part number**

f. Using assembly serial number**

g. Original manufacturer of part

h. Original manufacturer's part number

Please include as much of this information as possible so that your inquiry or order can be expedited.

To order a part that cannot be found on the replacement parts list, information items a, c, d, e, and f must be included with your inquiry or order.

6.4 RECOMMENDED SPARE PARTS

A list of recommended spare parts is available upon request from the Customer Service Department, Satellite Communications Division, at the address on the title sheet of this instruction manual. Be sure to include the manual reference number, which also appears on the title sheet, with your request.

In some cases, a spares list will be included in the Spare Parts section of this instruction manual.

---

*From title page of this instruction manual.
**From nomenclature tag attached to equipment.

PARTS LIST

ASSEMBLY E129106 MAINFRAME FINAL ASSY MODEL 411WB-D-

ITEM	COMPONENTS	DESCRIPTION	MFR	FSCM	MFR PART NUMBER
	0128377	MAINFRAME 411WB-SILKSCREEN DWG			
	0129999	SCHEMATIC MAINFRAME MODEL 411WB-D- RCVR			
1	0126137	CHASSIS RECEIVER MODEL 411WB			
2	0078600	NOT ASSIGNED			
3	0127979	COVER RECEIVER MODEL 411WB			
4	0126136	RACK MODULE LOWER MODEL 411WB-D-			
5	0126139	RACK MODULE UPPER MODEL 411WB-D-			
6	0111401	STAND OFF MODULE RACK			
7	0126788	PANEL ENGRAVED RCVR MODEL 411WB-D-			
8	0100995	RECEPTACLE BRKT,POWER SUPPLY AUX HOUSING			
9	0127960	BRACKET PANEL SUPPORT			
10	0127961	BRACKET CONVERTER PANEL UPPER			
11	0078600	NOT ASSIGNED			
12	0015253	HANDLE FRONT PANEL GREEN INSRT,SIZE H-5	SA	10110	15253
13	0040759	KNOB 3/4 OD 1/4 BORE POINTER ALUM	AEP	95146	KPN-7008A
14	0056930	CORD AC LINE, WITH FEMALE CONN 10A			
15	0078995	SCREW 6-32 X 1/2 F HD,100 DEG,SST	XZ		PER MS24693-C28
16	0078993	SCREW 6-32 X 1/4 F HD,100 DEG,SST	XZ		PER MS24693-C24
17	0072367	SCREW 6-32 X 1/2 PAN HD,SST	XZ		PER MS51957-30
18	0072363	SCREW 6-32 X 3/8 PAN HD,SST	XZ		PER MS51957-28
19	0072356	SCREW 6-32 X 3/8 TRUSS HD,CR PLT BRASS	XZ		CONTROL DWG 72356
20	0072319	SCREW 4-40 X 5/16 PAN HD,SST	XZ		PER MS51957-14
21	0072322	SCREW 4-40 X 3/8 TRUSS HD,CR PLT BRASS	XZ		CONTROL DWG 72322
22	0072299	SCREW 2-56 X 3/8 PAN HD,SST	XZ		PER MS51957-5
23	0085810	SCREW 8-32 X 1 3/8 FILL HD,CROSS-REC,C PL	XZ		BY DESCRIPTION
24	0073269	WASHER NO. 6 LOCK, EXT TOOTH, CAD PL STL	XZ		ANSI B18.21.1
25	0073265	WASHER NO. 4 LOCK, EXT TOOTH, CAD PL STL	XZ		ANSI B18.21.1
26	0073263	WASHER NO. 2 LOCK, EXT TOOTH, CAD PL STL	XZ		ANSI B18.21.1
27	0075446	NUT 6-32 UNC-2B,PLAIN-HEX,SST	XZ		PER MS35649-264
28	0071494	NUT 4-40 UNC-2B,PLAIN-HEX,SST	XZ		PER MS35649-244
29	0071493	NUT 2-56 UNC-2B,PLAIN-HEX,SST	XZ		PER MS35649-224
30	0075939	WASHER-NO. 6- .156 .375 .049 AUS SST	XZ		ANSI B18.22.1
31	0078600	NOT ASSIGNED			
32	0079827	SCREW 4-40 X 5/16 F HD,100 DEG,SST	XZ		PER MS24693-C3
33	0076423	PLUG HOLE 1/2 DIA HOLE NI PLT STL	CRR	83058	SS-48152 FINISH K1110
34	0078600	NOT ASSIGNED			
35	0127974	BRACKET CONVERTER PANEL LOWER			
36	0131867	COVER PLATE MS CONN SIZE 16 -D- HOLE			
37	0082723	SPACER NO.6 ID 3/8 OD 1/8 L CD PLT BRS	SH	83330	8731
38	0078600	NOT ASSIGNED			
39	0078600	NOT ASSIGNED			
40	0078600	NOT ASSIGNED			
41	0078600	NOT ASSIGNED			

PARTS LIST

ASSEMBLY E129106 MAINFRAME FINAL ASSY MODEL 411WB-D-continued

ITEM	COMPONENTS	DESCRIPTION	MFR	FSCM	MFR PART NUMBER
42	0078988	SCREW 4-40 X 3/16 F HD,100 DEG,SST	XZ		PER MS24693-C1
43	C143988	CABLE ASSY 50 OHM BNC-BNC			
44	C143987	CABLE ASSY 75 OHM BNC-BNC			
45	0078594	CLAMP CABLE 1/4-5/16 AL W/NECP LINR	TP	78553	C33144-3-52
46	0072298	SCREW 2-56 X 5/16 PAN HD,SST	XZ		PER MS51957-4
47	C083966	WASHER-NO. 2- .094 .250 .020 CAD PL STL	XZ		ANSI B18.22.1
48	0080851	TUBING HEAT SHRINK .375ID SHRINKS TO.187	AW	92194	FIT-221-3/8 CLEAR
CR1	0071115	DIODE 1N645 SIL 225V 400MA	GE	24446	1N645
CR2	0071115	DIODE 1N645 SIL 225V 400MA	GE	24446	1N645
CR3	0071115	DIODE 1N645 SIL 225V 400MA	GE	24446	1N645
CR4	0071115	DIODE 1N645 SIL 225V 400MA	GE	24446	1N645
F1	0071220	FUSE 1 AMP SLO BLO	L	75915	3AG 313001.
FL1	0079400	FILTER RF WITH PLUG & FUSEHOLDER	FLC	81831	FA10-163
M1	0126202	METER CARRIER/NOISE -DB- MDL 411WB RCVR			
M2	0129990	METER MULTI-FUNCTION MODEL 411WB/461WB	XZ		PER SA SPEC 129990
P111	0082847	CONN RND 23-COND MALE TO CBL QUICK DISC	BCE	77820	PT06A-16-23P-SR
P119	0070822	CONN RECT 24-COND MALE CABLE MT	ABE	02660	57 30240
PS1	0091479	POWER SUPPLY FINAL ASSY MODEL 402A			
R1	0079071	RESISTOR 121K OHM RN55C 1% MTL FLM	DP		RN55C1213F
R2	0079071	RESISTOR 121K OHM RN55C 1% MTL FLM	DP		RN55C1213F
R3	0075680	RESISTOR 27K OHM 1/4W 5% COMP	AB	01121	RCR07G273JS
S1	0078600	NOT ASSIGNED			
S2	0085920	SWITCH ROT 2P 2-12 POS NSH 2 SEC .812 SH	CRL		SA-203-4C-XXX
W1	0153450	CABLE ASSY 75 OHM BNC-BURNDY 14 INCH			
W2	0153451	CABLE ASSY 75 OHM BNC-BURNDY 16 INCH			
W3	0153451	CABLE ASSY 75 OHM BNC-BURNDY 16 INCH			
W4	0153451	CABLE ASSY 75 OHM BNC-BURNDY 16 INCH			
W5	0153451	CABLE ASSY 75 OHM BNC-BURNDY 16 INCH			
W6	0153451	CABLE ASSY 75 OHM BNC-BURNDY 16 INCH			
W7	0153451	CABLE ASSY 75 OHM BNC-BURNDY 16 INCH			
W8	0153451	CABLE ASSY 75 OHM BNC-BURNDY 16 INCH			
W9	0132528	CABLE ASSY 75 OHM BNC-3MM			
W10	0153454	CABLE ASSY 75 OHM BURNDY-BURNDY 4.5 INCH			
W11	0078600	NOT ASSIGNED			
W12	0153454	CABLE ASSY 75 OHM BURNDY-BURNDY 4.5 INCH			
W13	0153457	CABLE ASSY 75 OHM BURNDY-BURNDY 9 INCH			
W14	0153449	CABLE ASSY 75 OHM BNC-BURNDY 12 INCH			
W15	0132527	CABLE ASSY-BNC FEM/SMB FEM 50 OHMS			
W16	C143986	CABLE ASSY 50 OHM BNC-BNC MALE RT ANGLE			
W17	0153452	CABLE ASSY 75 OHM BNC-BURNDY 17 INCH			
W18	0153454	CABLE ASSY 75 OHM BURNDY-BURNDY 4.5 INCH			
W19	0078600	NOT ASSIGNED			
W20	0132528	CABLE ASSY 75 OHM BNC-3MM			
W21	0153451	CABLE ASSY 75 OHM BNC-BURNDY 16 INCH			
W22	0153451	CABLE ASSY 75 OHM BNC-BURNDY 16 INCH			
W23	0131801	HARNESS ASSY 411 WB RECEIVER MAINFRAME			

MANUFACTURERS CODES

S-A Code	Manufacturer
AB	Allen-Bradley Company Milwaukee, Wisc.
ABE	Amphenol Corporation Broadview, Ill.
AEP	Alco Electronic Products No. Andover, Ma.
BCE	Bendix Corporation, Elec. Comp. Div. Sidney, N.Y.
CRL	Centralab Milwaukee, Wisc.
CRR	Carr Fastener Cambridge, Mass.
DP	Dale Products, Inc. Columbus, Neb.
FLC	Filtron Company Flushing, N.Y.
GE	General Electric Schenectady, N.Y.
L	Littelfuse Des Plaines, Ill.
SA	Scientific-Atlanta, Inc. Atlanta, Ga.
SH	Smith, Herman H. Brooklyn, N.Y.
TP	Tinnerman Products, Inc. Cleveland, Oh.
XZ	Any manufacturer that produces this part to appropriate military-federal- or commercial specs

SECTION 7
DRAWINGS

7.1 GENERAL

This section contains the schematic diagram of the receiver mainframe and shows any modifications that may have been made to the standard production version. In addition, schematic diagrams of any special attachments to the receiver are contained in this section of this instruction manual. For the schematic diagrams of the individual plug-in modules, refer to the appropriate section of this instruction manual.

The second slot from the right, with the receiver viewed from the front, can be used as a test slot. The pins of the interface connector on the module plugged into the test slot are brought out to the rear of the receiver. In this way, the receiver power supply can be used to power the module while it is under test. The receiver may or not be operational, however, under these conditions. Refer to figure 7-1 for pin connections.

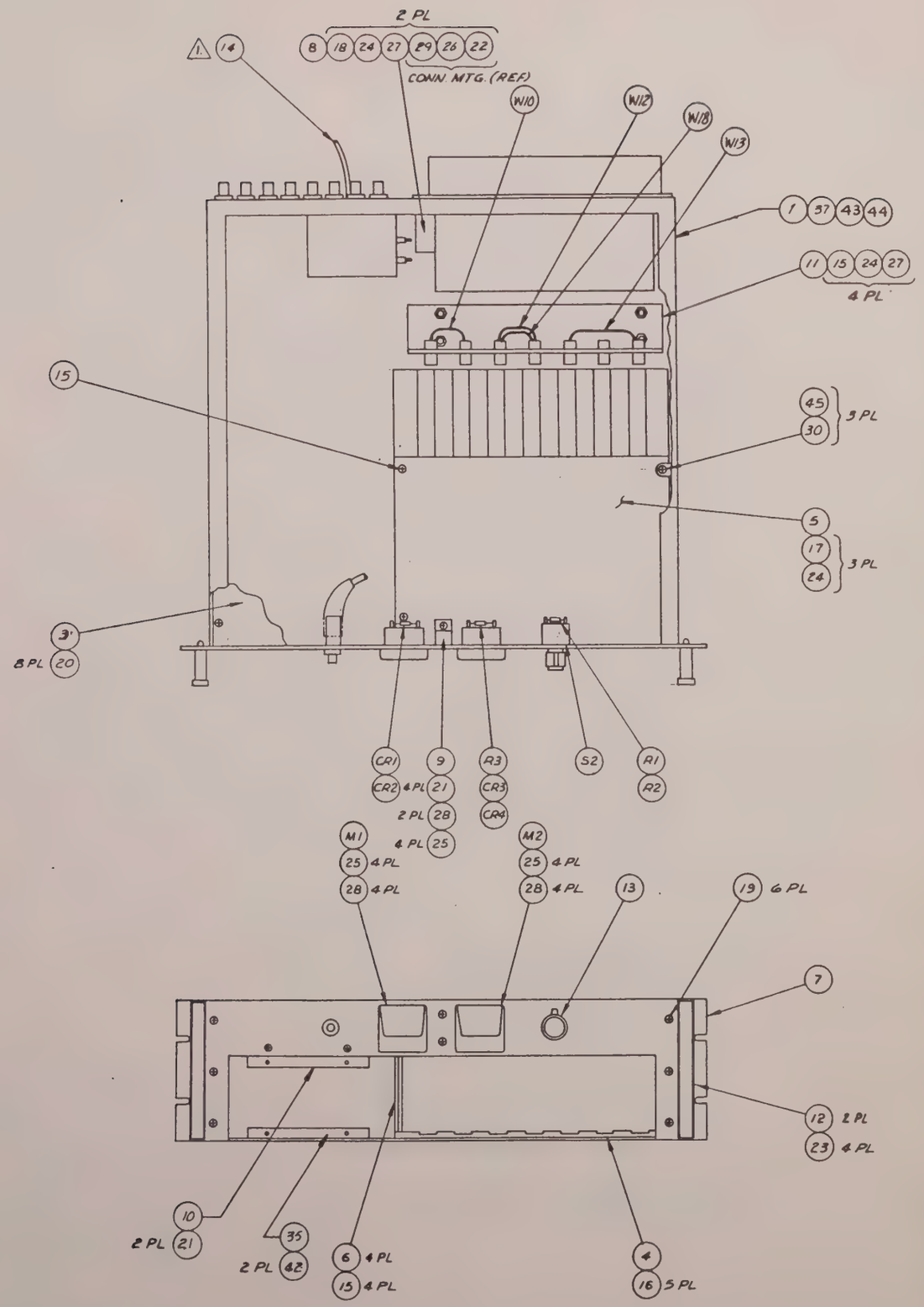

NOTE:
1. THESE ITEMS ARE BEING TRANSFERED TO 411 HARNESS ASSEMBLY 131801 AND WILL BE WIRED AT THIS STAGE OF PRODUCTION

NOTE: 1. ITEM 14 INSTALLED IN CHECKOUT.
2. TAPE ITEMS 37, 43 & 44 TO THE INSIDE OF THE MAIN FRAME FOR INSTALLATION IN CHECKOUT.

CABLE RUN LIST

CABLE NO.	FROM	TO
W1	J132-C	J103
W2	J134-C	J104
W3	J134-B	J105
W4	J135-A	J106
W5	J135-B	J107
W6	J136-A	J108
W7	J136-B	J109
W8	J136-C	J110
W9	J121	J114
W10	J131-B	J132-A
W11	——	——
W12	J133-B	J134 A
W13	J135-C	J137-A
W14	J131-A	J115
W15	J122	J102
W16	J123	J113
W17	J135-D	J117
W18	J133-D	J134-D
W19	——	——
W20	J126	J118
W21	J132-B	J124
W22	J133-A	J125
W23	J137-B	J119
W24	J131-C	
W25		

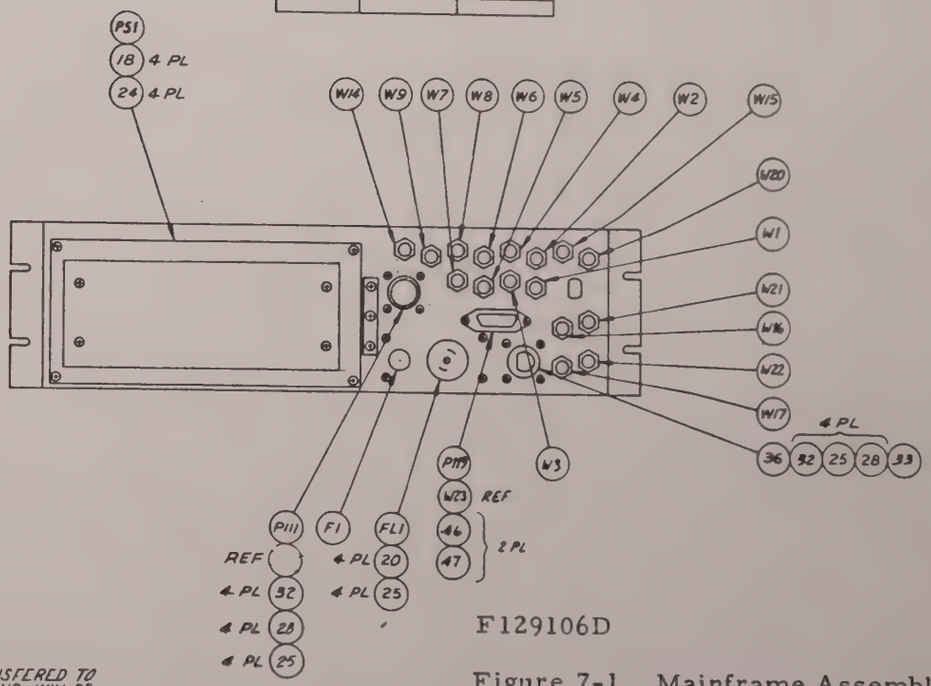

F129106D

Figure 7-1. Mainframe Assembly, Model 411 WB Receiver

RX CONFIGURATION
-04
-03
-02

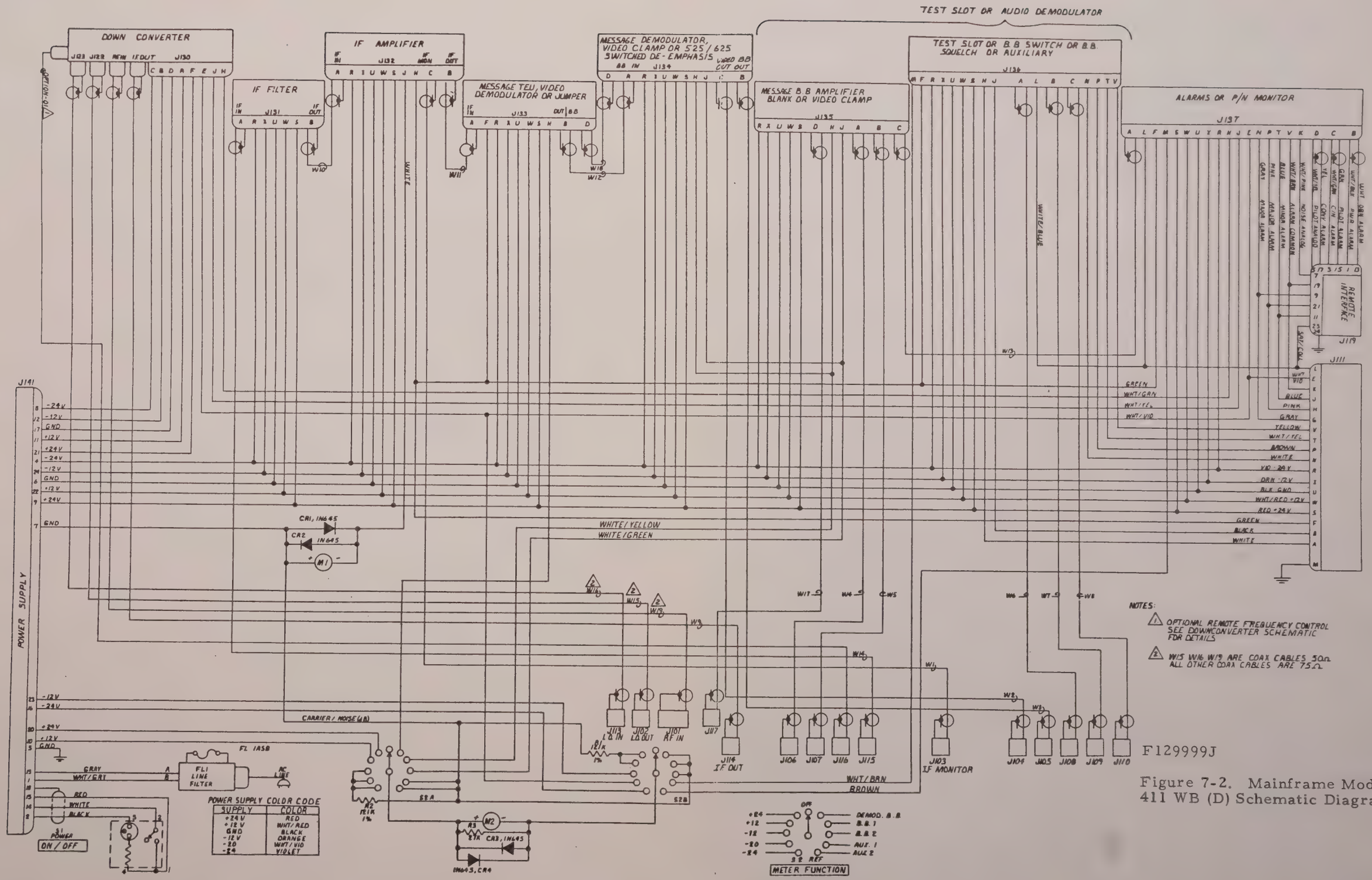

F129999J

Figure 7-2. Mainframe Model 411 WB (D) Schematic Diagram

IMPORTANT NOTE

The information behind this tabbed divider may apply to more than one item. Check all pages carefully.

IMPORTANT NOTE

The information behind this tabbed divider may apply to more than one item. Check all pages carefully.

SECTION 8
MODEL 402A POWER SUPPLY
PART NO. 243691

8.1 DESCRIPTION

The Model 402A Power Supply (figure 8-1) is a plug-in unit intended to furnish dc power to modules of the Scientific-Atlanta Series 400 equipment. The unit produces four voltages: +24V dc, +12V dc, -12V dc, and -24V dc. The nominal line voltage is 115V ac, or 230V ac with an internal wiring option. Current limiting is provided on all four supplies, and over-voltage protection in the form of a crowbar circuit is provided on the 12V dc and -12V dc supplies.

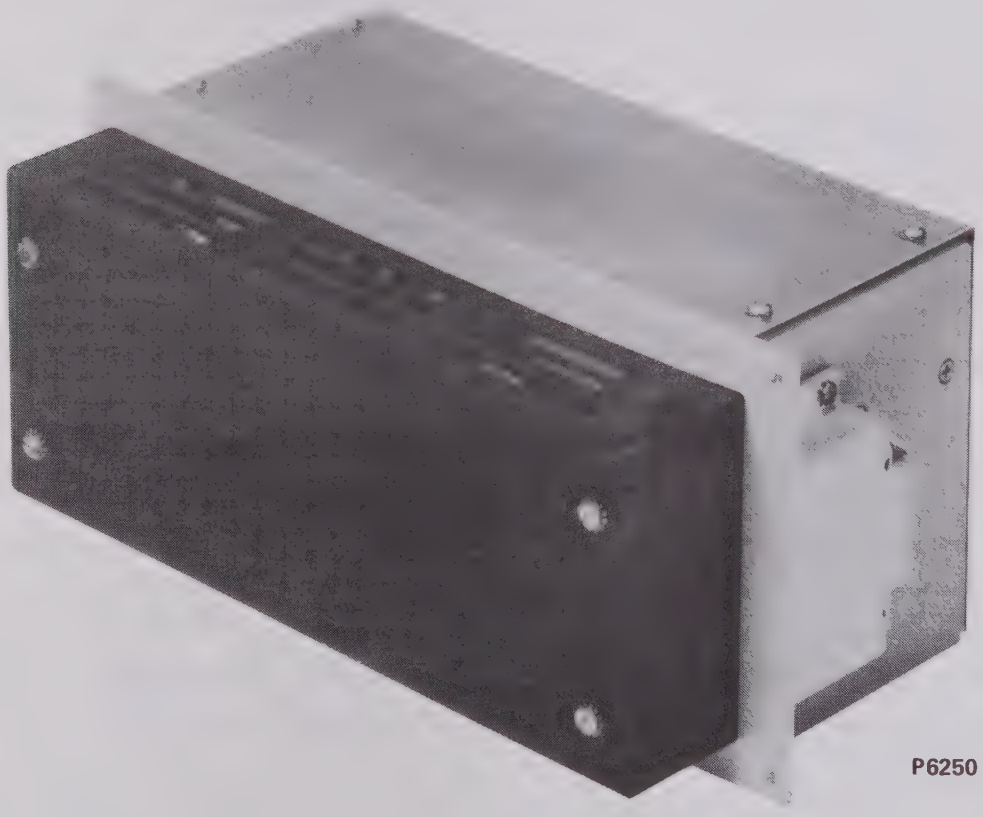

Figure 8-1. Model 402A Power Supply

8.1.1 Technical Characteristics

Characteristic	Specification
Weight	10-3/4 lbs. (Nominally)
Power Consumption	105-125V ac, 47-63 Hz, 150 watts
	210-250V ac, 47-63 Hz, 150 watts
Output Voltage	+24V dc, ±0.15V dc
	-24V dc, ±0.15V dc
	+12V dc, ±0.10V dc
	-12V dc, ±0.10V dc
Regulation (no load to full load)	±0.15V dc, Max
Noise and Ripple	±24V dc, 15 mV peak-to-peak, Max
	±12V dc, 10 mV peak-to-peak, Max
Output Current	+24V dc, 800 mA
(full load)	-24V dc 2200 mA
	+12V dc, 1200 mA
	-12V dc, 1400 mA
Short Circuit Output Current	+24V dc, 800 mA
	-24V dc, 2200 mA
	+12V dc, 1200 mA
	-12V dc, 1400 mA

8.1.2 Construction

The printed wiring board assembly, filter capacitors (C1 and C2), and power transformer (T1) are mounted to the chassis. The mounting plate, heat sinks, and pass transistors mount to the rear of the chassis, and the L-shaped cover mounts to the top and front section of the chassis. Interface is provided through a connector mounted on the side of the power supply unit.

8.1.3 Circuit Description

Figure 8-2 is a block diagram and figure 8-5 is a schematic diagram of the Model 402A Power Supply. The two primary windings of transformer T1 are

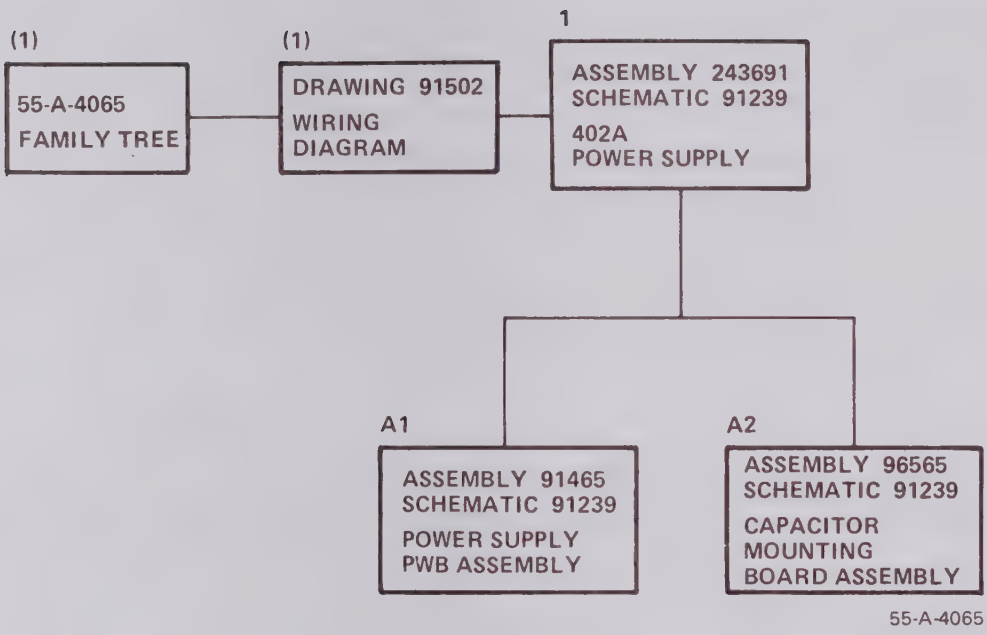

Figure 8-2. Model 402A Power Supply Block Diagram

wired in parallel to provide 115V ac operation, or they can be wired in series for optional 230V ac operation. The secondary winding of transformer T1 provides 48V ac for the rectifier and filter. Two dc buses of approximately +35V dc and -35V dc are provided by the rectifier and filter.

8.1.3.1 Positive Regulator Circuits. Regulators IC1 and IC2 are high-gain differential amplifiers with a built-in stable reference supply. Regulator IC1 is connected to the series-pass transistor complementary pair Q2 and Q3. Each regulator circuit will set its output voltage at a level that makes the voltage at pin 6 equal to the internal reference supply (1.8 volts bypassed by pin 5). By adjusting the voltage divider ratio into pin 6, the output voltage of the regulator circuit can be set at the desired level. Regulator IC1 controls the +24 volt supply and regulator IC2 controls the +12 volt supply. Rectified raw dc is approximately 35V for the supplies.

Resistors R5 and R10 develop a voltage drop proportional to the current that each regulator circuit is supplying to the load. When this voltage reaches approximately 0.4 volt, the LM305 will cause the output voltage to decrease as a function of load current. The +24 volt regulator circuit limits at 0.80A and the +12 volt regulator circuit at 1.2A.

The +12 volt supply is over-voltage protected by triac CR1. When the +12 volt supply exceeds approximately 16 volts, 15 volt zener diode CR2 conducts and supplies gate current to the triac. The triac fires and discharges C1 through F1, thereby opening F1.

8.1.3.2 Negative Regulator Circuits. Regulators IC3 and IC4 are high-gain differential amplifiers that use a constant current source to develop a reference voltage at pin 1. The current is determined by the resistance between pin 2 and the unregulated supply. The reference voltage is determined by the resistance between pin 1 and supply common. Each regulator is connected to a series-pass transistor complementary pair (Q4-Q5 and Q6-Q7). Each regulator circuit will set its output voltage connected to the second input (pin 8) of the differential amplifier in each IC regulator to equal the

reference voltage at pin 1. By adjusting the resistance between pin 1 and supply common, the output voltage can be set to the desired value. Regulator IC3 controls the -12 volt supply and regulator IC4 controls the -24 volt supply. Rectified raw dc is approximately 35V for the supplies.

Resistors R17 and R22 develop a voltage drop proportional to the current that each regulator circuit is supplying to the load. When this voltage reaches approximately 0.65 volts, the LM304 will cause the output voltage to decrease as a function of load current. The -12 volt regulator circuit limits at 1.4A, and the -24 volt regulator circuit at 2.2A. The -12 volt supply is over-voltage protected by triac CR7. When the supply voltage exceeds approximately 16 volts, 15 volt zener diode CR8 conducts and supplies gate current to CR7. The triac fires and discharges C2 through F2, thereby opening F2.

8.2 MAINTENANCE

Refer to section 5 of this instruction manual for general maintenance information.

Remove the power supply from the chassis and operate through an extension cable for maintenance and adjustment. Connectors on the cable must be Amphenol 57-20240 and 57-10240.

Remove the power supply from the chassis by taking out four screws, one in each corner, and pulling the supply straight out. Do not remove the screws in the black cover.

To gain access to the interior of the power supply, remove the 11 screws that secure the L-shaped cover to the frame of the supply.

8.2.1 Fuse Replacement and 230V ac Line Voltage Option

Remove the cover from the power supply. Locate fuses F1 and F2 inside the power supply and install 3AG2A fast-blow fuses.

CAUTION

Do not use slo-blo fuses inside the power supply or damage to the supply may occur.

The 402A Power Supply is wired for 115V ac operation. The supply can be modified for 230V ac operation by rewiring the unit at transformer (T1). Terminals one through four should be rewired as shown in the schematic diagram (figure 8-5). If the supply is modified for 230V ac operation, the proper line fuse should be used in the Scientific-Atlanta Series 400 Mainframe.

Note

A line fuse is provided in Scientific-Atlanta Series 400 Mainframes. A 3AG 1A SLO-BLO fuse is used in mainframes wired for 115V ac operation, and a 3AG 1/2A SLO-BLO is used in mainframes wired for 230V ac operation.

8.2.2 Access to Circuit Boards

a. Remove power from the supply.

b. Take off the cover and discharge the +24V and -24V filter capacitors to chassis through a low value of resistance. DO NOT SHORT CIRCUIT DIRECTLY. (These capacitors are mounted on the vertical board next to the transformer.)

CAUTION

These capacitors should be discharged any time work is being done inside the supply with power removed.

c. Remove the nuts at each corner of the board and swing the board out. The wires are long enough to permit operation of the supply with the board removed.

CAUTION

Place a sheet of insulating material
under the board before applying power.

d. Before replacing the board, tighten each of the four screws in the angles by hand. Install all hardware and tighten the nuts securely. Make sure that nothing has fallen into the interior of the power supply before closing up the unit.

8.2.3 Alignment and Performance Testing

Scientific-Atlanta Test Procedure No. 100731 is reproduced in Appendix A following this section. It can be used to verify that the Model 402A Power Supply is operating properly. No adjustments should be required during normal operation.

8.3 REPLACEMENT PARTS

A replacement parts list for the Model 402A Power Supply starts on page 8-8. This list contains descriptive information on those items that are considered replaceable in the unit. Refer to section 6 of this instruction manual for further information.

TECHNICAL MANUAL PARTS LIST

PART# 0243691 EM/RV A DESCRIPTION: PWR SUPPLY MODEL 402A FINAL ASSEMBLY

REF DESIG	PART NO.	EM RV	DESCRIPTION	VENDOR	VENDOR PART NUMBER	QTY	FSCM CODE
	0091239	P	SCHEMATIC,POWER,SUPPLY,402A	SA		.	10110
	0091502	G	DIAG,WIRING,POWER,SUPPLY,402A	SA		.	10110
	0095294		DIAG,HARNESS,402A,POWER,SUPPLY	SA		1.	10110
	0100731		TEST PROCEDURE 402A POWER SUPPLY	SA		.	10110
001	0132439		LABEL HIGH VOLTAGE 1/2-IN. X 1-IN.	XZ	PER SA DWG 132439	1.	-----
002	0104196	B	CHASSIS,POWER SUPPLY MODEL 402A	SA		1.	10110
003	0090677		COVER,MODEL 402A POWER SUPPLY	SA		1.	10110
004	0104712		HEAT SINK MODEL 402A	SA		2.	10110
005	0071289		GROMMET 3/16 ID 5/16HOLE 1/16PNL RUBBER	FS	1656	2.	73734
006	0090680	F	COVER,HEATSINK MODEL 402A POWER SUPPLY	SA		1.	10110
007	0080033		SPACER NO.6 ID 7/32 OD 3/4 L NI PLT BRS	FS	9416	4.	73734
009	0081128		SCREW 4-40 X 9/16 PAN HD,SST	XZ	BY DESCRIPTION	8.	-----
010	0078135		SCREW 2-56 X 1/2 PAN HD,SST	XZ	PER MS51957-7	4.	-----
011	0079414		TRANSSTR MTG HARDWARE MICA ETC. FOR TO-3	DRD	7274775	4.	16758
012	0076802		SCREW 6-32 X 1 1/8 PAN HD,SST	XZ	BY DESCRIPTION	2.	-----
013	0073266		WASHER-NO. 4- .125 .250 .022 AUS SST	XZ	ANSI B18.22.1	9.	-----
014	0073265		WASHER NO. 4 LOCK, EXT TOOTH, CAD PL STL	XZ	ANSI B18.21.1	18.	-----
015	0072350		SCREW 6-32 X 1/4 PAN HD,SST	XZ	PER MS51957-26	3.	-----
016	0073013		TERMINAL GND INT TOOTH NO6 ANGLED	SH	1416-6	1.	83330
017	0075466		NUT 6-32 UNC-2B,PLAIN-HEX,SST	XZ	PER MS35649-264	9.	-----
018	0072317		SCREW 4-40 X 1/4 PAN HD,SST	XZ	PER MS51957-13	6.	-----
020	0090674	C	BRACKET,CONNECTOR MTG MODEL 402A PWR SUP	SA		1.	10110
021	0090673		BRACKET,CONN MTG COVER MDL 402A PWR SUP	SA		1.	10110
022	0090672	E	ANGLE,RH PC BOARD MTG MODEL 402A PWR SUP	SA		2.	10110
024	0078961		SCREW 6-32 X 1 3/4 PAN HD,SST	XZ	PER MS51957-37	4.	-----
027	0077322		SCREW 4-40 X 1/4 PAN HD,TAPTITE,CAD PLT	CS	BY DESCRIPTION	11.	72228
028	0071493		NUT 2-56 UNC-2B,PLAIN-HEX,SST	XZ	PER MS35649-224	4.	-----
029	0090678	H	PANEL,COMPONENT MTG MODEL 402A PWR SUP	SA		1.	10110
030	0078988		SCREW 4-40 X 3/16 F HD,100 DEG,SST	XZ	PER MS24693-C1	6.	-----
031	0078146		SCREW 6-32 X 5/8 F HD,82 DEG,SST	XZ	PER MS51959-31	4.	-----
032	0075936		WASHER NO. 2 LOCK, INT TOOTH, CAD PL STL	XZ	ANSI B18.21.1	8.	-----
033	0018141	C	LABEL 2 IN. BLANK	SA		1.	10110
034	0073269		WASHER NO. 6 LOCK, EXT TOOTH, CAD PL STL	XZ	ANSI B18.21.1	16.	-----
035	0073270		WASHER-NO. 6- .156 .312 .035 AUS SST	XZ	ANSI B18.22.1	4.	-----
036	0071495		NUT 4-40 UNC-2B,SM PATT 3/16 HEX,SST	XZ	BY DESCRIPTION	1.	-----
037	0071498		NUT 6-32 UNC-2B,SM PATT 1/4 HEX,SST	XZ	BY DESCRIPTION	2.	-----
038	0076802		SCREW 6-32 X 1 1/8 PAN HD,SST	XZ	BY DESCRIPTION	2.	-----

TECHNICAL MANUAL PARTS LIST

PART# 0243691 EN/RV A DESCRIPTION: PWR SUPPLY MODEL 402A FINAL ASSEMBLY

REF DESIG	PART NO.	EN RV	DESCRIPTION	VENDOR	VENDOR PART NUMBER	QTY	FSCM CODE
A 001	0091465-01	*	PWB ASSY POWER SUPPLY MODEL 402A	SA		1.	10110
A 002	0096565	C	CAPACITOR MOUNTING ASSY	SA		1.	10110
A 003	0210836		REGULATOR BRACKET	SA		1.	10110
C 021	0080761		CAPACITR .005 MF 3KV CER DISC Z5U 20%	CRL	DD30-502	1.	71590
C 022	0070530		CAPACITR 250 PF 1KV CER DISC Z5F 10%	CRL	DD-251	1.	71590
CR003	0078600		NOT ASSIGNED			.	
CR004	0078600		NOT ASSIGNED			.	
CR005	0078600		NOT ASSIGNED			.	
CR006	0078600		NOT ASSIGNED			.	
CR009	0080695		RECTIFIER ASSY 100V 6A SOLDER LUGS	VAO	VH148	1.	83003
P 001	0078946		CONN RECT 24-COND MALE CHASSIS MT	ABE	57-10240	1.	02660
Q 001	0086603		TRANSSTR MJ900 PNP POWER DARLINGTON TO-3	MOS	MJ900	1.	04713
Q 002	0078017		TRANSSTR 2N3055 NPN SIL TO-3 CASE	FSC	2N3055	1.	13715
Q 005	0078017		TRANSSTR 2N3055 NPN SIL TO-3 CASE	FSC	2N3055	1.	13715
Q 007	0078017		TRANSSTR 2N3055 NPN SIL TO-3 CASE	FSC	2N3055	1.	13715
T 001	0104388	B	XFMR 1SEC 48VCT 2.6A 2PRI 115 50/400HZ	XZ	104388	1.	

TECHNICAL MANUAL PARTS LIST

PART# 0091465-01 EN/RV * DESCRIPTION: PWB ASSY POWER SUPPLY MODEL 402A

REF DESIG	PART NO.	EN RV	DESCRIPTION	VENDOR	VENDOR PART NUMBER	QTY	FSCM CODE
001	0065662	K	PW BOARD,POWER SUPPLY 402A			1.	-----
002	0071494		NUT 4-40 UNC-2B,PLAIN-HEX,SST	XZ	PER MS35649-244	2.	-----
003	0072327		SCREW 4-40 X 3/8 PAN HD,SST	XZ	PER MS51957-15	2.	-----
004	0075937		WASHER-NO. 4- .125 .312 .032 AUS SST	XZ	ANSI B18.22.1	2.	-----
005	0073265		WASHER NO. 4 LOCK, EXT TOOTH, CAD PL STL	XZ	ANSI B18.21.1	2.	-----
007	0078139		TUBING TEFLON AWG22 NATURL .027ID .047OD	SH	7702-22-115	.	83330
008	0079335		PAD TRANSSTR TO5 & TO18 TO TO5	THC	7717-44-DAP	5.	13103
C 003	0070498		CAPACITR 47 PF 500V SILVER MICA 5%	CD	CD15ED470J03	1.	14655
C 004	0070671		CAPACITR 100 MF 25V	SP	500D107G025DD7	1.	80183
C 005	0070498		CAPACITR 47 PF 500V SILVER MICA 5%	CD	CD15ED470J03	1.	14655
C 006	0070671		CAPACITR 100 MF 25V	SP	500D107G025DD7	1.	80183
C 007	0070589		CAPACITR .1 MF 50V CER DISC Z5V -20+80%	CRL	CK104	1.	71590
C 008	0070671		CAPACITR 100 MF 25V	SP	500D107G025DD7	1.	80183
C 009	0070671		CAPACITR 100 MF 25V	SP	500D107G025DD7	1.	80183
C 010	0070589		CAPACITR .1 MF 50V CER DISC Z5V -20+80%	CRL	CK104	1.	71590
C 011	0070531		CAPACITR 270 PF 500V SILVER MICA 5%	CD	CD15FD271J03	1.	14655
C 012	0070498		CAPACITR 47 PF 500V SILVER MICA 5%	CD	CD15ED470J03	1.	14655
C 013	0070498		CAPACITR 47 PF 500V SILVER MICA 5%	CD	CD15ED470J03	1.	14655
C 014	0077256		CAPACITR 470 PF 100V SILVER MICA 5%	CD	CD7FA471J03	1.	14655
C 015	0077256		CAPACITR 470 PF 100V SILVER MICA 5%	CD	CD7FA471J03	1.	14655
C 016	0075417		CAPACITR .01 MF 150V CER DISC Z5V-40+60%	CRL	DDM-103	1.	71590
C 017	0075417		CAPACITR .01 MF 150V CER DISC Z5V-40+60%	CRL	DDM-103	1.	71590
C 018	0070589		CAPACITR .1 MF 50V CER DISC Z5V -20+80%	CRL	CK104	1.	71590
C 019	0075417		CAPACITR .01 MF 150V CER DISC Z5V-40+60%	CRL	DDM-103	1.	71590
C 020	0075417		CAPACITR .01 MF 150V CER DISC Z5V-40+60%	CRL	DDM-103	1.	71590
CR001	0078712		THYRISTOR TRIAC SENSITIVE-GATE 100V 3A	HUI	HI 13SS	1.	-----
CR002	0078714		DIODE 1N4744A SI ZEN 15V 5% 1W	MOS	1N4744A	1.	04713
CR007	0078712		THYRISTOR TRIAC SENSITIVE-GATE 100V 3A	HUI	HI 13SS	1.	-----
CR008	0078714		DIODE 1N4744A SI ZEN 15V 5% 1W	MOS	1N4744A	1.	04713
F 001	0071223		FUSE 2 AMP	L	3AG 312002.	1.	75915
F 002	0071223		FUSE 2 AMP	L	3AG 312002.	1.	75915
Q 003	0076316		TRANSSTR 2N4036 PNP SIL	RCA	2N4036S	1.	79089
Q 004	0076316		TRANSSTR 2N4036 PNP SIL	RCA	2N4036S	1.	79089
Q 006	0076316		TRANSSTR 2N4036 PNP SIL	RCA	2N4036S	1.	79089

TECHNICAL MANUAL PARTS LIST

PART# 0091465-01 EN/RV * DESCRIPTION: PWB ASSY POWER SUPPLY MODEL 402A

REF DESIG	PART NO.	EN RV	DESCRIPTION		VENDOR	VENDOR PART NUMBER	QTY	FSCM CODE
R 001	0077298		RESISTOR 1 OHM 3W WW 5%		TO	VAL-3	1.	24681
R 002	0071907		RESISTOR 220 OHM 1/4W 10% COMP		AB	RCR07G221KS	1.	01121
R 003	0071907		RESISTOR 220 OHM 1/4W 10% COMP		AB	RCR07G221KS	1.	01121
R 004	0077298		RESISTOR-1 OHM 3W WW 5%		TO	VAL-3	1.	24681
R 005	0071813		RESISTOR .50 OHM 3W WW 5%		TO	VAL3	1.	24681
R 006	0078577		RESISTOR 20.0K OHM RN60C 1% MTL FLM		DP	RN60C2002F	1.	91637
R 007	0078724		POT 1K OHM 1/2W CER 3/8 DIA VERT ADJ		AB	SV1021	1.	01121
R 008	0078929		RESISTOR 1.00K OHM RN55C 1% MTL FLM		DP	RN55C1001F	1.	91637
R 009	0071887		RESISTOR 100 OHM 1/4W 10% COMP		AB	RCR07G101KS	1.	01121
R 010	0081051		RESISTOR .35 OHM 3W WW 5%		WIE	RW69VR35	1.	63743
R 011	0078906		RESISTOR 4.99K OHM RN60C 1% MTL FLM		DP	RN60C4991F	1.	91637
R 012	0078724		POT 1K OHM 1/2W CER 3/8 DIA VERT ADJ		AB	SV1021	1.	01121
R 013	0078457		RESISTOR 590 OHM RN60C 1% MTL FLM		DP	RN60C5900F	1.	91637
R 014	0078722		POT 5K OHM 1/2W CER 3/8 DIA VERT ADJ		AB	SV5021	1.	01121
R 015	0078905		RESISTOR 4.87K OHM RN60C 1% MTL FLM		DP	RN60C4871F	1.	91637
R 016	0078898		RESISTOR 2.49K OHM RN60C 1% MTL FLM		DP	RN60C2491F	1.	91637
R 017	0071813		RESISTOR .50 OHM 3W WW 5%		TO	VAL3	1.	24681
R 018	0071887		RESISTOR 100 OHM 1/4W 10% COMP		AB	RCR07G101KS	1.	01121
R 019	0078722		POT 5K OHM 1/2W CER 3/8 DIA VERT ADJ		AB	SV5021	1.	01121
R 020	0078246		RESISTOR 10.0K OHM RN60C 1% MTL FLM		DP	RN60C1002F	1.	91637
R 021	0078898		RESISTOR 2.49K OHM RN60C 1% MTL FLM		DP	RN60C2491F	1.	91637
R 022	0081051		RESISTOR .35 OHM 3W WW 5%		WIE	RW69VR35	1.	63743
R 023	0071887		RESISTOR 100 OHM 1/4W 10% COMP		AB	RCR07G101KS	1.	01121
U 001	0078719		IC VLTG RGLTR +4.5 TO +40V .025A	T05	NSC	LM305AH	1.	12040
U 002	0078719		IC VLTG RGLTR +4.5 TO +40V .025A	T05	NSC	LM305AH	1.	12040
U 003	0078720		IC VLTG RGLTR 0 TO -30V .015A TYP	T05	NSC	LM304H TO-5	1.	12040
U 004	0078720		IC VLTG RGLTR 0 TO -30V .015A TYP	T05	NSC	LM304H TO-5	1.	12040
XF001	0071244		FUS HLDR BLOCK FOR 3AG OR 3AB		BUS	4405	1.	71400
XF002	0071244		FUS HLDR BLOCK FOR 3AG OR 3AB		BUS	4405	1.	71400

TECHNICAL MANUAL PARTS LIST

PART# 0096565 EN/RV C DESCRIPTION: CAPACITOR MOUNTING ASSY

REF DESIG	PART NO.	EN RV	DESCRIPTION	VENDOR	VENDOR PART NUMBER	QTY	FSCM CODE
	0149108	C	SCHEMATIC,POWER,SUPPLY,402A,MOD	SA		.	10110
U01	0092369		BRACKET CAPACITOR MOUNTING	SA		1.	10110
U02	0092370		BOARD TERMINAL	SA		2.	10110
U04	0073017		TERMINAL SOLDER TURRET STAKE STD	KEE	1582-2	12.	91833
U05	0072327		SCREW 4-40 X 3/8 PAN HD,SST	XZ	PER MS51957-15	2.	-----
U06	0071494		NUT 4-40 UNC-2B,PLAIN-HEX,SST	XZ	PER MS35649-244	2.	-----
U07	0073265		WASHER NO. 4 LOCK, EXT TOOTH, CAD PL STL	XZ	ANSI B18.21.1	2.	-----
U08	0073318		WIRE 22 BUS	BM	8021	.	70903
C1A	0075221		CAPACITR 1100 MF 50V	SP	39D118G050HP4	1.	80183
C1B	0075221		CAPACITR 1100 MF 50V	SP	39D118G050HP4	1.	80183
C1C	0075221		CAPACITR 1100 MF 50V	SP	39D118G050HP4	1.	80183
C2A	0075221		CAPACITR 1100 MF 50V	SP	39D118G050HP4	1.	80183
C2B	0075221		CAPACITR 1100 MF 50V	SP	39D118G050HP4	1.	80183
C2C	0075221		CAPACITR 1100 MF 50V	SP	39D118G050HP4	1.	80183

MANUFACTURERS CODES

FSCM	MANUFACTURER
10110	Scientific-Atlanta, Inc. 3845 Pleasantdale Rd. Atlanta, GA 30340
01121	Allen Bradley Company Milwaukee, WI
02660	Amphenol Corporation Broadview, IL
04713	Motorola Products Phoenix, AZ
10110	Scientific-Atlanta, Inc. Atlanta, GA
12040	National Semiconductor Corporation Danbury, CT
13715	Fairchild-Semiconductor Corporation San Rafael, CA
14655	Cornell-Dubilier Electric Corp. S. Plainfield, NJ
16758	Delco Radio -- Div. of General Motors Kokoma, IN
24681	Memcor, Inc. Huntington, IN
63743	Ward-Leonard Electric Mt. Vernon, NY
70903	Belden Mfg. Co. Chicago, IL
71400	Bussman Manufacturing St. Louis, MO
71590	Centralab Milwaukee, WI
72228	Continental Screw Company New Bedford, MA
73734	Federal Screw Products Chicago, IL

FSCM	MANUFACTURER
75915	Littlefuse, Inc. Des Plaines, IL
79089	Radio Corporation of America Harrison, NJ
80183	Sprague Products N. Adams, MA
80294	Bourns Lab, Inc. Riverside, CA
83003	Varo Inc. Garland, TX
83330	Herman Smith Brooklyn, NY
91833	Keystrone Electronics Corp. New York, NY
VENDOR	
HUI	Hutson Industries Dallas, TX
XZ	Any manufacturer that produces this part to appropriate Military-Federal-or Commercial Specification.

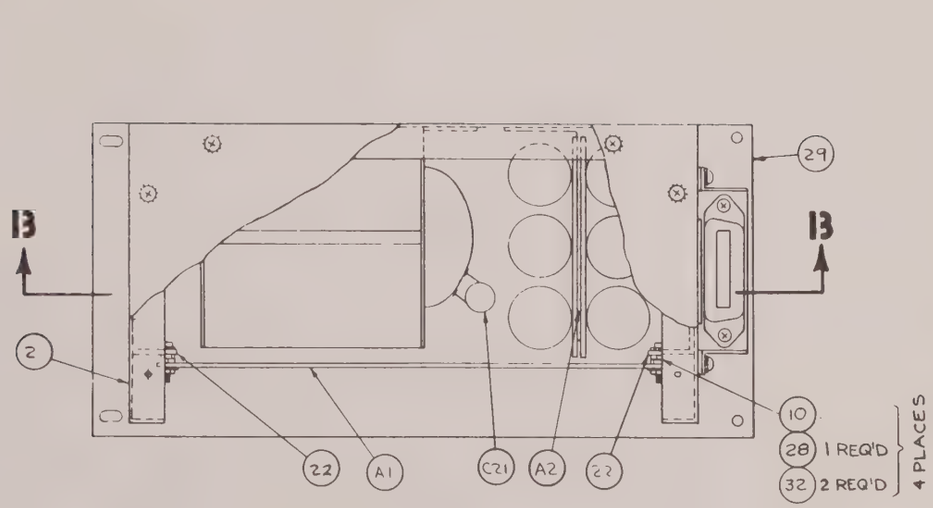

PLAN

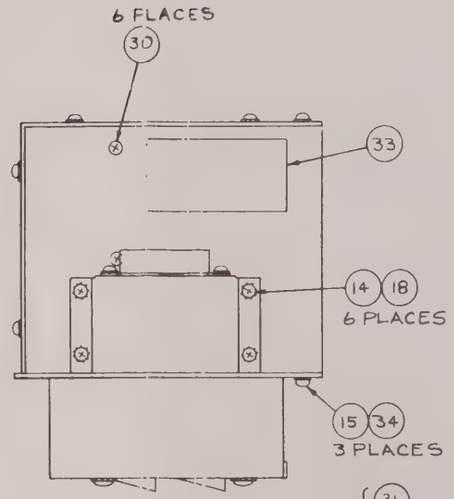

END VIEW

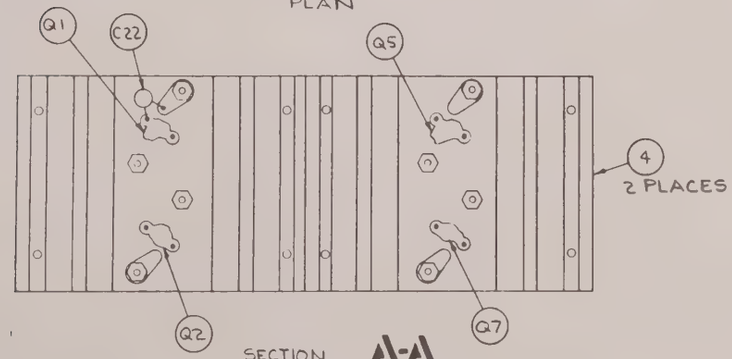

SECTION A-A

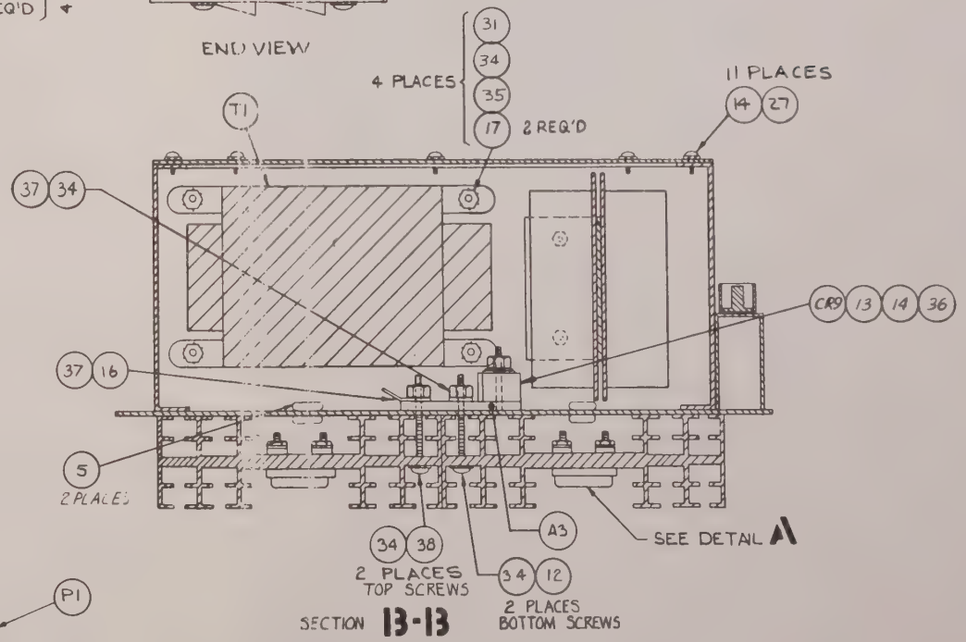

SECTION B-B

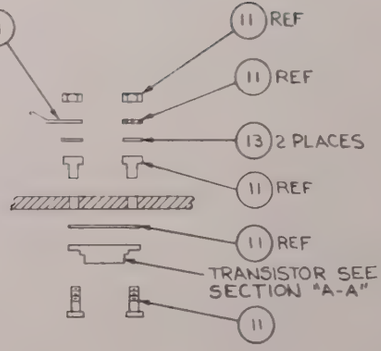

DETAIL A

TYP MTG FOR Q1, Q2, Q5, Q7

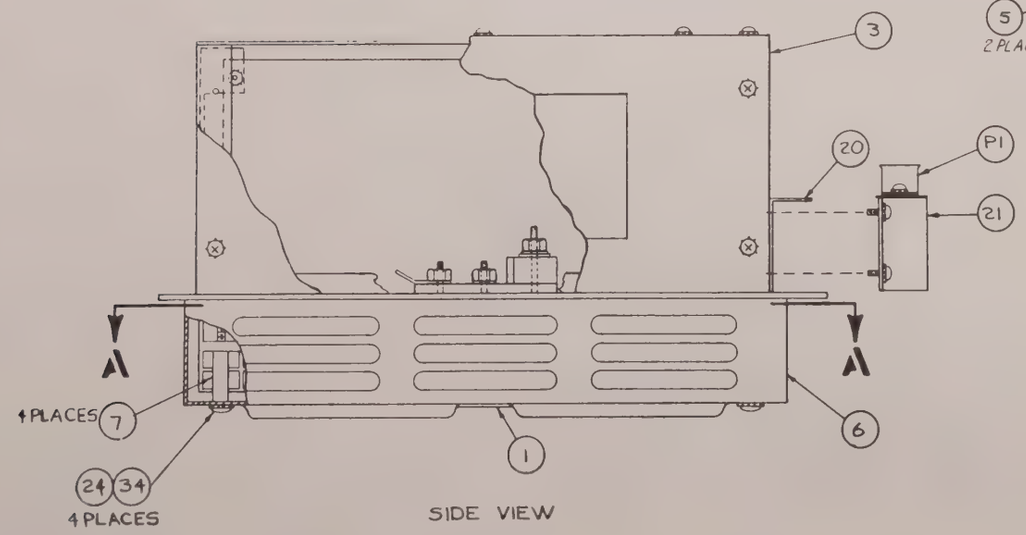

SIDE VIEW

Figure 8-3. Model 402A Power Supply Final Assembly, 243691A

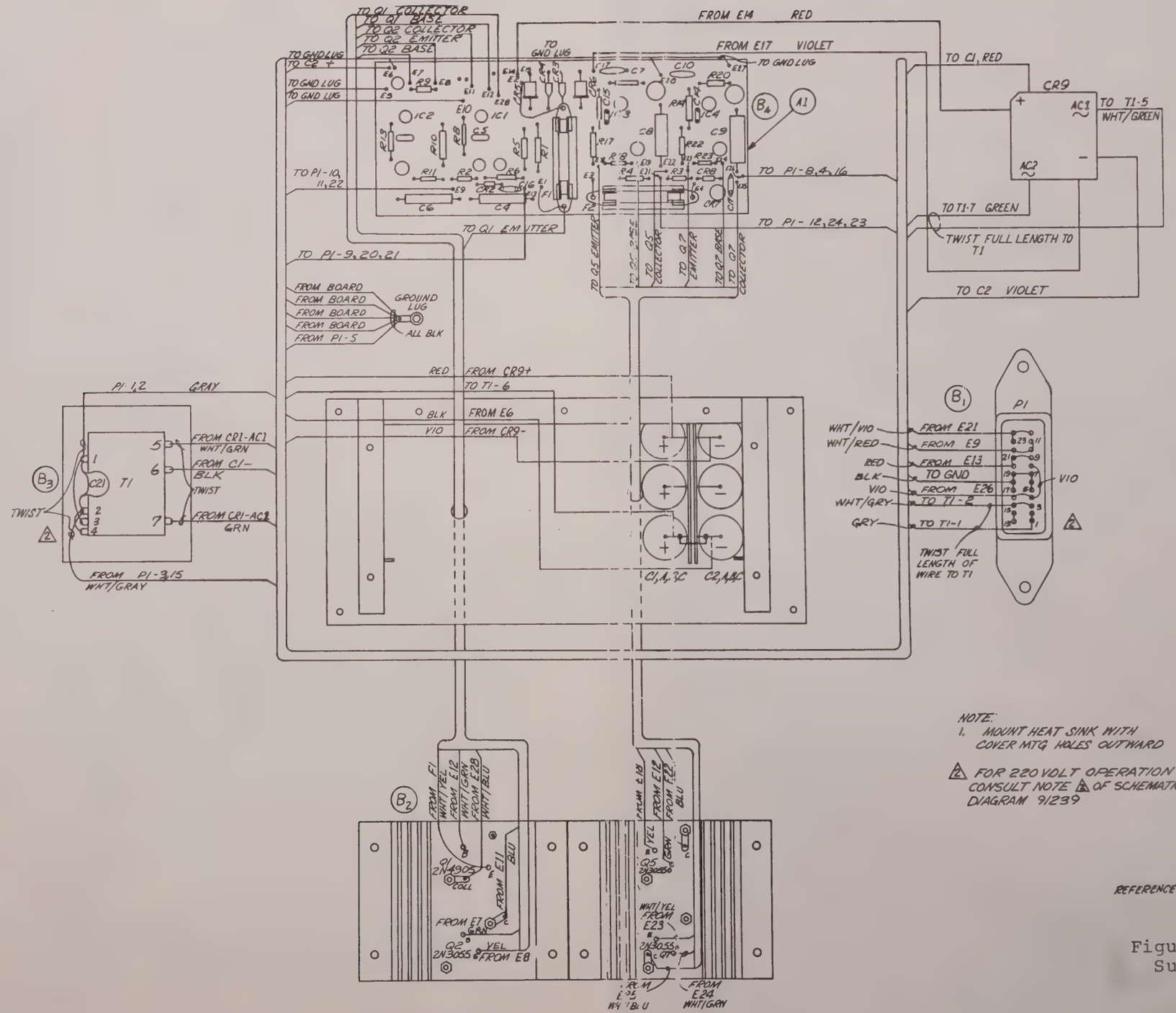

NOTE:
1. MOUNT HEAT SINK WITH COVER MTG HOLES OUTWARD

2 FOR 220 VOLT OPERATION CONSULT NOTE 2 OF SCHEMATIC DIAGRAM 91239

REFERENCE SCHEMATIC D91239A

Figure 8-4. Model 402A Power Supply Wiring Diagram, 91502G

WIRE COLOR LIST			
E1	BUS	E16	GREEN
E2	BUS	E16	WHT/GREEN
E3	BUS	E17	VIOLET
E4	BUS	E18	YELLOW
E5	BLACK	E19	GREEN
E6	BLACK	E20	BLACK
E7	GREEN	E21	WHT/VIOLET
E8	YELLOW	E22	BLUE
E9	WHT/RED	E23	WHT/YELLOW
E10	BLACK	E24	WHT/GREEN
E11	BLUE	E25	WHT/BLUE
E12	WHT/GREEN	E26	VIOLET
E13	RED	E27	BLACK
E14	RED	E28	WHT/BLUE

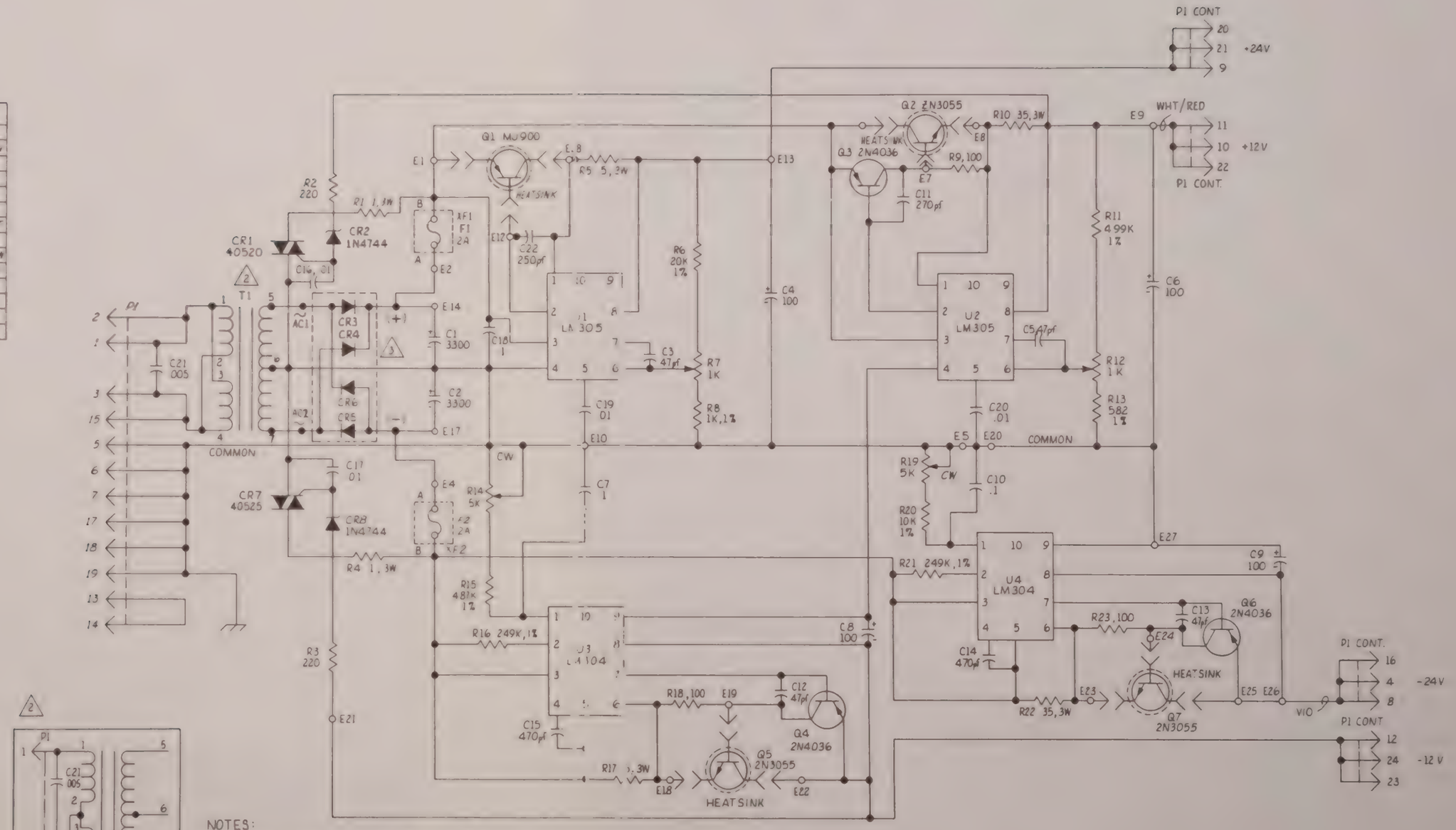

NOTES:

1. C1, C2, Q1, Q2, Q7, Q5, C21, & C22 ARE NOT ON THE POWER SUPPLY PC BOARD - 65662.
2. FOR 220 VAC OPERATION, WIRE T1 AS SHOWN AT LEFT.
3. CR3, CR4, CR5, & CR6 OF "M" REVISION HAS BEEN REPLACED BY CR9 RECTIFIER ASSEMBLY, (80895) AND R5, 10 OHM, REPLACED BY 0.5 OHM

FOR SERIAL NO. 2286 AND UP

Figure 8-5. Model 402A Power Supply Schematic Diagram, 91239P

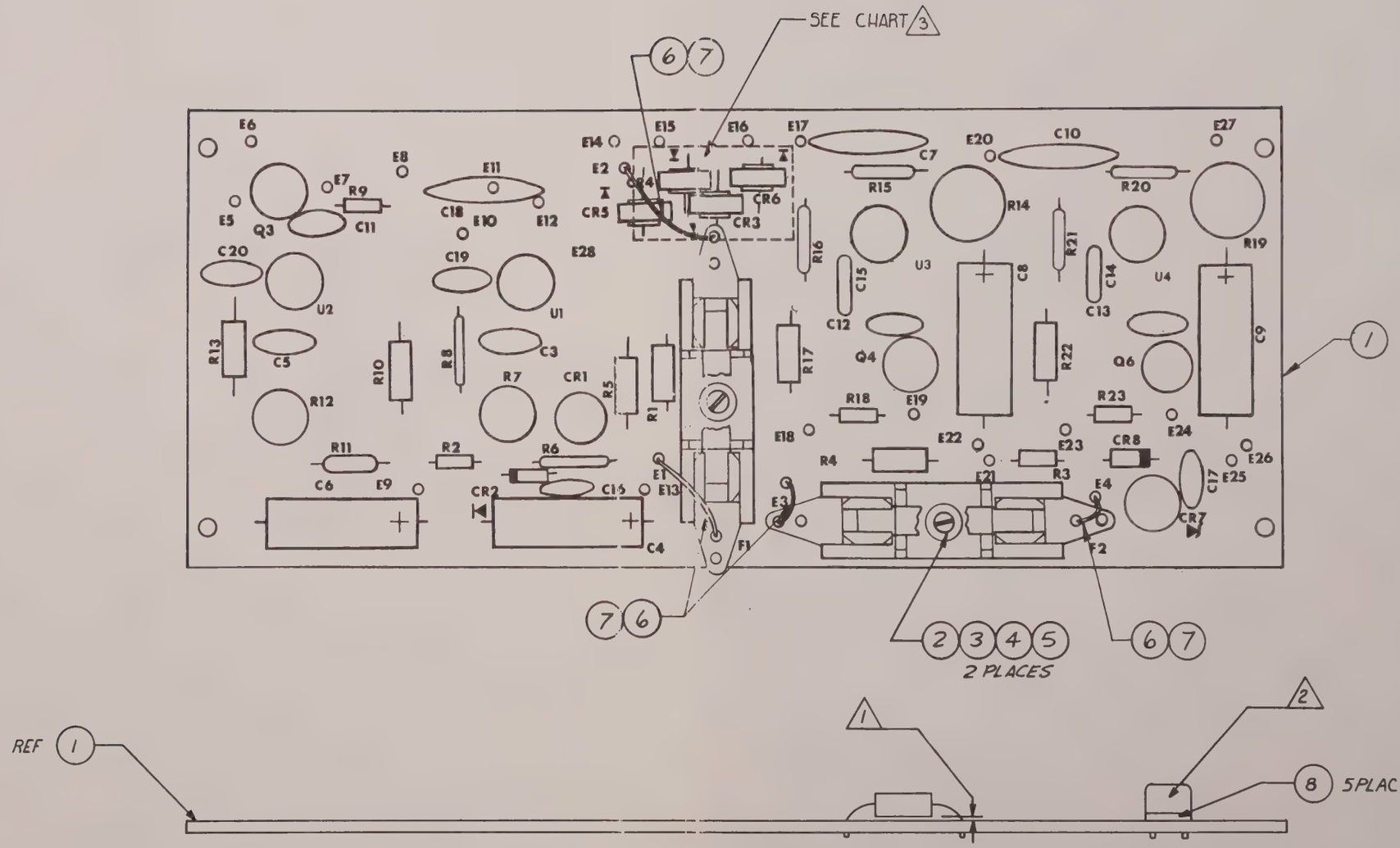

NOTES;

1. RESISTORS R1,4,5,10,17 & 22 ARE MOUNTED 1/32 TO 1/16 INCH ABOVE BOARD.
2. PADS ARE TO BE INSTALLED UNDER CR1, CR7, Q3, Q4 + Q6.
3. PWB ASSEMBLY 91465-01 NEXT ASSEMBLY TO BE 243691. PWB ASSEMBLY 91465 NEXT ASSEMBLY TO BE 91479.

APPLICATION CHART

	PWB ASSY	COMPONENTS CHANGE	VOLTAGE	USED ON
3	91465-01	CR9 RECTIFIER ASSY	+24V SA BUS	402A
3	91465	CR3, CR4, CR5 & CR6 DIODE RECTIFIER	+24V	402A

Figure 8-6. Model 402A Power Supply PWB Assembly, 91465-01R

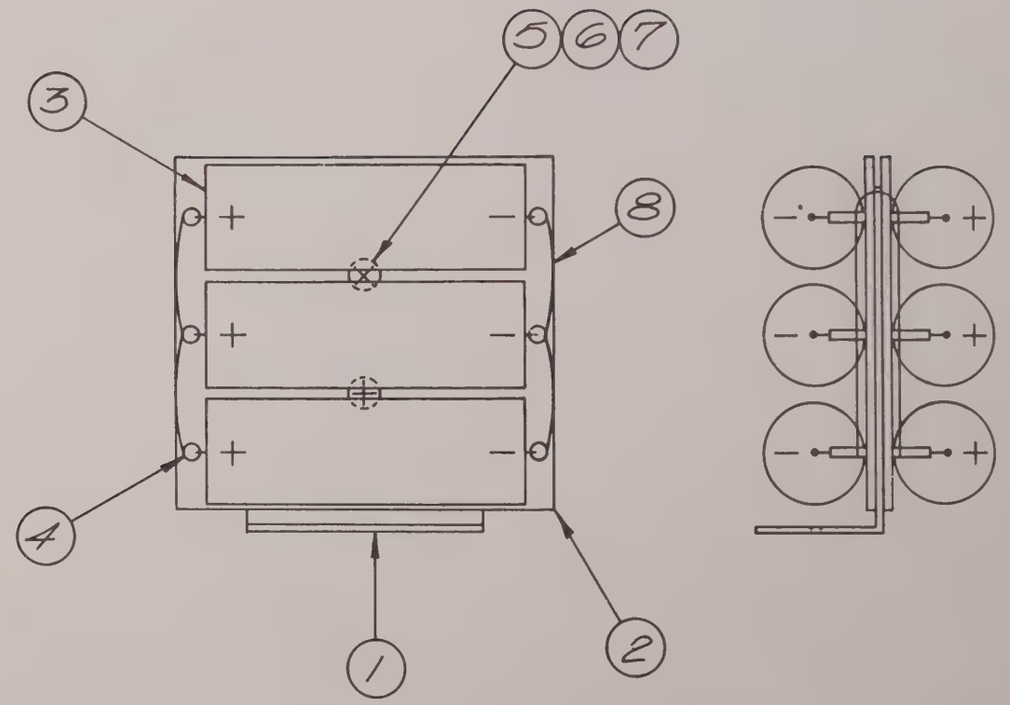

Figure 8-7. Model 402A Capacitor Mounting Boards Assembly, 96565

APPENDIX A
TEST PROCEDURE
MODEL 402A POWER SUPPLY

APPLICATION	
NEXT ASSY	USED ON
91479	402A
243691	402A

REVISIONS			
SYM	DESCRIPTION	DATE	APPROVED
A	Page 7 para. 5.4 Test Limits +12 supply was .80	10-13-70	Sam Baxter
B	Retyped on current drawing form; References to testing 230V ac units added. DCN 2779	3-28-79	C Reid
C	Increased the output current of +24 volt output and changed load on fixture schematic.	8-17-81	C Reid
D	Revision Level Corrected, Sheets 1&3. ECR 1791.	2-11-82	C Reid
E	Revised per ECR 1903.	3-17-82	C Reid
F	See DCN	2/9/83	C. Smith

REV																												
SHEET																												
REV STATUS	REV	E	C	E	C	B	B	E																				
OF SHEETS	SHEET	1	2	3	4	5	6	7																				

ALL DIMENSIONS ARE IN INCHES UNLESS OTHERWISE SPECIFIED

TOLERANCES
3 PLACE DECIMALS ± .005
2 PLACE DECIMALS ± .02
1 PLACE DECIMAL ± .1

FRACTIONS ± ANGLES ± 0°30

MAX SURFACE ROUGHNESS 125 ALL MACHINED SURFACES EXCEPT AS NOTED

BREAK SHARP EDGES AND CORNERS .010 MAX

FINISH

CONTRACT NO

DWN	T. Hickman	10-8-69
ENGR	Jack B. Chastain	10-8-69
CHK	Leroy B. Smith	10-8-69
PROJ	L. Rumble	8-20-81
APVD	Sam Baxter	7-1-71
APVD		

Scientific-Atlanta, Inc.
3845 Pleasantdale Road, Atlanta, Georgia 30340

TEST PROCEDURE
MODEL 402A POWER SUPPLY

SIZE	CODE IDENT NO.	DRAWING NO
A	10110	100731

SCALE | REV F | SHEET 1 of 7

SA434-871

1.0 SCOPE

The purpose of this procedure is to perform all required adjustment and testing for Scientific-Atlanta Model 402A Power Supply.

2.0 APPLICABLE DOCUMENTS

Model 402A Power Supply Assembly	91479
PWB Assembly	91465
Schematic Diagram	91239
Wiring Diagram	91502

3.0 TEST EQUIPMENT

Item	Manufacturer/Model No.
DC Voltmeter	Ballantine/353
Oscilloscope	H-P/1200AR
AC Variac	General Radio/W10MT3
Cable (48 inches, BNC-M to BNC-M)	RG223/U
Test Fixture	Refer to Figure 1 st-10245

4.0 INSPECTION AND ADJUSTMENT

4.1 Preliminary Inspection and Adjustment

1. Visually inspect the unit for any possible violations of quality and workmanship standards outlined in Scientific-Atlanta Workmanship Manual.
2. Check that F1 and F2 are 2.5A fuses (do not use SB). Check OK on the data sheet.

	SIZE	CODE IDENT NO.	DRAWING NO.
	A	10110	100731
	SCALE	REV C	SHEET 2 of 7

SA375-270

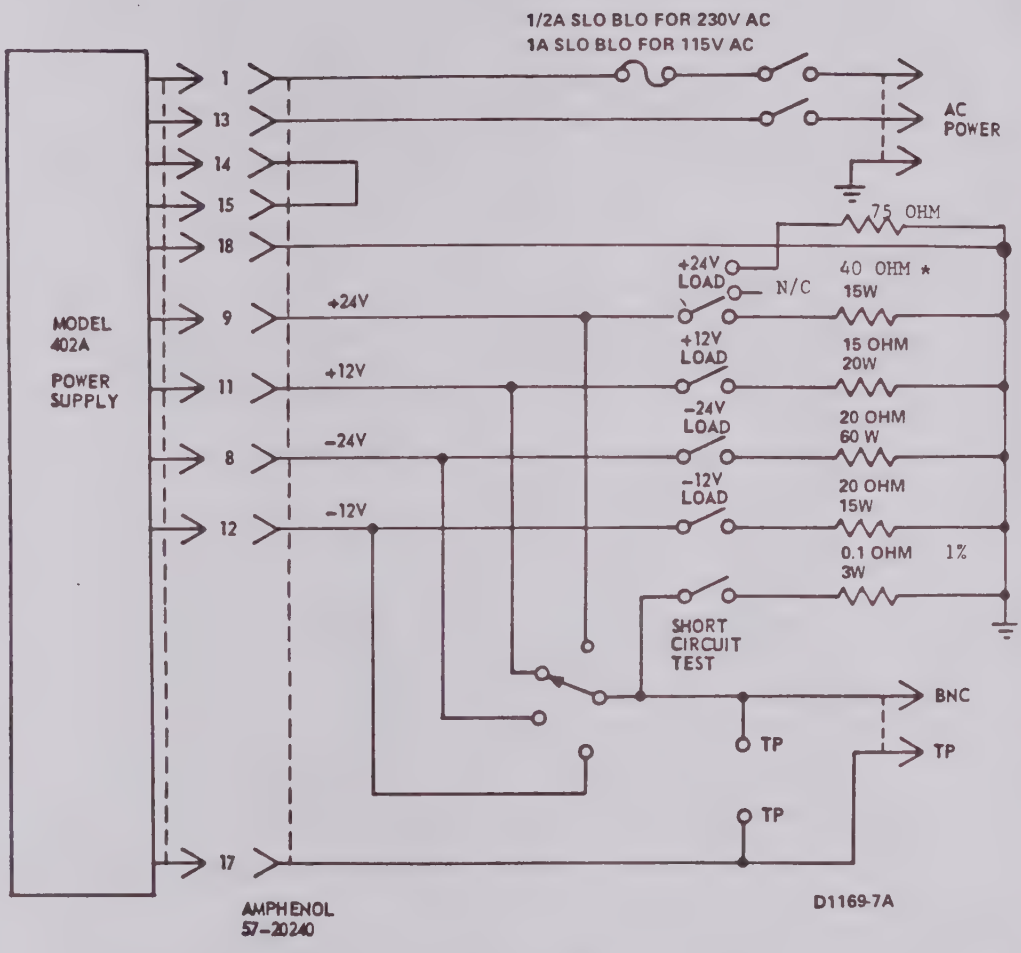

* +24V Load is 75 ohms for P/N 91479 and 40 ohms for P/N 243691.

Figure 1. Test Fixture Schematic Diagram

SIZE	CODE IDENT NO.	DRAWING NO.
A	10110	100731
SCALE	REV E	SHEET 3 of 7

SA375-270

3. Turn R7, R12, R14 and R19 fully CCW before applying ac power. Check OK on the data sheet.

NOTE

This procedure was written for testing the Model 402A Power Supply wired for 115V ac operation. If the 402A Power Supply to be tested has been wired with the 230V option, then all ac line voltages referred to in this test procedure should be doubled.

4.2 Adjustment

1. Apply 115V ac to the unit and monitor the +24V output with the dc voltmeter. Adjust R7 for +24 ±0.01V dc. Check OK on the data sheet.
2. Monitor the +12 volt supply and adjust R12 for +12 ±0.01 volts out. Check OK on the data sheet.
3. Monitor the -24 volt supply and adjust R19 for -24 ±0.01 volts out. Check OK on the data sheet.
4. Monitor the -12 volt supply and adjust R14 for -12 ±0.01 volts out. Check OK on the data sheet.

5.0 PERFORMANCE TESTS Note: +24V Load is 75 ohms for P/N 91479 and 40 ohms for P/N 243691.

This portion of the test procedure determines if the power supply is performing within its specifications. Regulation, noise, and protection are checked on each supply.

5.1 Load Regulation Tests

1. Connect the dc voltmeter to monitor the +24 volt supply. Apply a full load to the supply. Record the dc voltage. Remove the load.
2. Repeat this procedure for the +12, -24 and -12 volt supplies.

SIZE	CODE IDENT NO.	DRAWING NO
A	10110	100731
SCALE	REV C	SHEET 4 of 7

SA375-270

5.2 Load and Line Regulation Tests

1. Connect the dc voltmeter to monitor the +24 volt supply. With no load, adjust ac input voltage to 130 volts. Record the dc voltage.
2. Apply full load to the supply. Adjust the ac input voltage to 105 volts. Record the dc voltage. Reset the ac input to 115V.
3. Repeat this procedure for the +12, -24 and -12 volt supplies.

5.3 Noise and Ripple Tests

1. Connect the oscilloscope to monitor the +24 volt supply. Apply full load. Record the peak-to-peak noise and ripple. Adjust the ac input to 105V ac and record the peak-to-peak noise and ripple. Reset the ac input to 115V.
2. Repeat this procedure for the +12, -24 and -12 volt supplies.

5.4 Protection Tests

5.4.1 Short-Circuit Protection

1. Connect a 0.1 ohm resistor from the +24 volt supply to circuit common and measure the voltage across the resistor with the dc voltmeter. Compute the current through the resistor and record it (0.1 volt per amp).
2. Repeat this procedure for the +12, -24 and -12 volt supplies.

5.4.2 Over-Voltage Protection Tests

1. Monitor the output of the +12 volt supply with the dc voltmeter. Slowly turn R12 CW to increase the output dc voltage. Watch the meter and observe the maximum voltage out just before F1 blows. Record this voltage. Turn R12 fully CCW and replace F1. Readjust R12 for a +12 ±0.01 volt output.
2. Repeat this procedure for the -12 volt supply and R14.

	SIZE	CODE IDENT NO.	DRAWING NO.
	A	10110	100731
	SCALE	REV B	SHEET 5 of 7

SA375-270

DATA SHEET
TEST PROCEDURE
MODEL 402A POWER SUPPLY

Serial No._____Date_____

Technician_____

Approved_____

Ref. Para.		
4.1	Preliminary Inspection and Adjustments	
4.1.2	Fuses F1 and F2 2A	Check OK_____
4.1.3	All Potentiometers Adjusted CCW	Check OK_____
4.2	Adjustment	
4.2.1	+24 Volt Supply Adjusted	Check OK_____
4.2.2	+12 Volt Supply Adjusted	Check OK_____
4.2.3	-24 Volt Supply Adjusted	Check OK_____
4.2.4	-12 Volt Supply Adjusted	Check OK_____

5.1 Load Regulation Tests (115V ac*)

Supply	No Lead	Test Limits	Full Load	Test Limits
+24	_____V dc	24 ±0.15V dc	_____V dc	24 ±0.15V dc
+12	_____V dc	12 ±0.10V dc	_____V dc	12 ±0.10V dc
-24	_____V dc	-24 ±0.15V dc	_____V dc	-24 ±0.15V dc
-12	_____V dc	-12 ±0.10V dc	_____V dc	-12 ±0.10V dc

* If the unit under test is wired for 230V ac input, double the ac voltage given.

SIZE	CODE IDENT NO	DRAWING NO.
A	10110	100731
SCALE	REV B	SHEET 6 of 7

SA375-270

Ref.
Para.

5.2 Load and Line Regulation Tests

Supply	No Load *130V ac	Test Limits	Full Load *105V ac	Test Limits
+24	_____V dc	24 ±0.15V dc	_____V dc	24 ±0.15V dc
+12	_____V dc	12 ±0.10V dc	_____V dc	12 ±0.10V dc
-24	_____V dc	-24 ±0.15V dc	_____V dc	-24 ±0.15V dc
-12	_____V dc	-12 ±0.10V dc	_____V dc	-12 ±0.10V dc

5.3 Noise and Ripple Tests

Supply	Full Load *115V ac	Test Limits	Full Load *105V ac	Test Limits
+24	_____mV p-p	15 mV p-p	_____mV p-p	15 mV p-p
+12	_____mV p-p	10 mV p-p	_____mV p-p	10 mV p-p
-24	_____mV p-p	15 mV p-p	_____mV p-p	15 mV p-p
-12	_____mV p-p	10 mV p-p	_____mV p-p	10 mV p-p

5.4 Protection Tests

Supply	Current Limit	Test Limits	Over-Voltage	Test Limits
+24	_____A dc	** 0.80 ±0.2A dc	N/A	N/A
+12	_____A dc	1.2 ±0.2A dc	_____V dc	16 ±2V dc
-24	_____A dc	2.2 ±0.2A dc	N/A	N/A
-12	_____A dc	1.4 ±0.2A dc	_____V dc	-16 ±2V dc

** +24V supply current is .4 A for P/N 91479 and .8 A for P/N 243691.

*If the unit under test is wired for 230V ac input, double the ac voltage given.

	SIZE	CODE IDENT NO.	DRAWING NO
	A	10110	100731
	SCALE	REV E	SHEET 7 of 7

SA375-270

IMPORTANT NOTE

The information behind this tabbed divider may apply to more than one item. Check all pages carefully.

33R060Z

IMPORTANT NOTE

The information behind this tabbed divider may apply to more than one item. Check all pages carefully.

33R0602

SECTION 10
DOWNCONVERTER -- PART NO. 209397

10.1 DESCRIPTION

The 125-kHz steps downconverter is a bolt-in unit intended for use in the Scientific-Atlanta Series 411 Receiver equipment. Input is RF in the 3.7- to 4.2-GHz band; output is a 70-MHz IF signal. The standard version has a built-in frequency synthesizer. Remote frequency selection is available as an option. Power is furnished from the receiver mainframe.

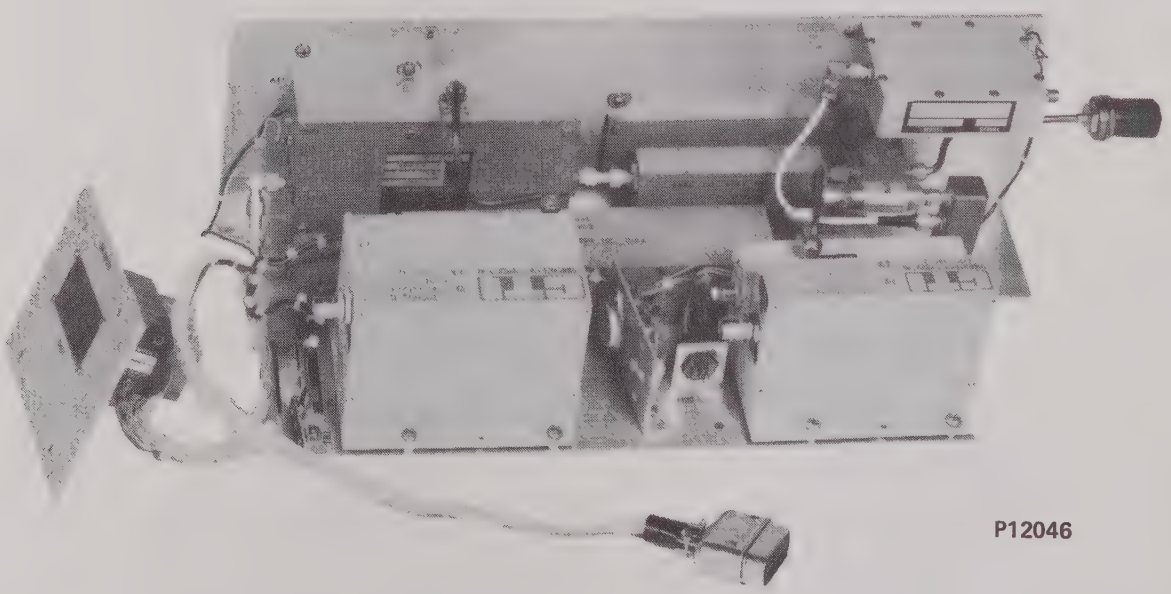

Figure 10-1. 125-kHz Steps Downconverter -- Series 411

10.1.1 Technical Characteristics

Table 10-1 provides technical characteristics for the Series 411 downconverter. Table 10-2 lists technical characteristics for the VHF frequency synthesizer.

TABLE 10-1. TECHNICAL CHARACTERISTICS - SERIES 411 DOWNCONVERTER 125-kHz STEPS

Characteristic	Specification
Input	
Frequency	3700 to 4200 MHz
Level	-20 dBm maximum
Impedance	50 ohms
Return Loss	23 dB
Noise Figure	14 dB maximum, 12 dB typical
Output	
Frequency	70 Mhz ±20 MHz
Impedance	75 ohms (unbalanced)
Return Loss	Greater than 23 dB from 50 MHz to 90 MHz
Image Attenuation	80 dB minimum
Local Oscillator Leakage	-80 dBm maximum at RF input
RF-IF Gain	20 dB nominal
Gain Response	±0.25 dB, f_o ±18 MHz
IF Bandwidth	40 MHz, minimum
Delay Distortion	
Linear	Less than ±0.03 ns/MHz, f_o ±18 MHz
Parabolic	Less than 0.01 ns/MHz^2, f_o ±18 MHz
Ripple	Less than 1.0 ns peak-to-peak, f_o ±18 MHz

TABLE 10-1. TECHNICAL CHARACTERIESTICS - SERIES 411 DOWNCONVERTER 125-kHz STEPS - continued

Characteristic	Specification
Third-Order Distortion	Greater than 50 dB below the desired carrier level when driven by two equal carriers at the RF input at -30 dBm each
Spurious Responses	65 dB below desired signal

TABLE 10-2. TECHNICAL CHARACTERISTICS - VHF SYNTHESIZER

Characteristic	Specification
Frequency Range	100.2604167 to 110.6770833 MHz
Power Output	+1 dBm ±1 dB
Frequency Accuracy	
Synthesizer P/N 142260	
Reference	Internal, 5.000 MHz
Temperature Stability	1×10^{-6}, 0°C to 50°C
Aging Rate	1×10^{-6} per year 3×10^{-9} per day
Synthesizer P/N 153500	
Reference	External, 5 MHz at 0 dBm ±3 dB
FM Noise at Signal Frequency	45 Hz maximum, 300 Hz to 3.5 kHz from carrier
Output Power Stability	±0.5 dB over specified temperature range
Switching Time	0.5 second typical 1 second maximum

TABLE 10-2. TECHNICAL CHARACTERISTICS - VHF SYNTHESIZER - continued

Characteristic	Specification
Spurious Outputs	
Non-harmonic	Less than -85 dBC
Harmonic	Less than -25 dBC
Load VSWR	∞: 1 tolerable, all phases
Step Size	5.208333 kHz (250 kHz out of X48 phase-locked multiplier)
Connectors	
Output	BNC
Output Reference Input	BNC
Output Impedance	50 ohms
Input Impedance (Optional External Reference)	50 ohms
Drive Level (Optional External Reference)	0 dBm ±1 dB
Programming	See table 10-4
FM Noise	Less than 2 Hz rms
Temperature	
Operating	0°C to +60°C
Storage	-50°C to +100°C
Humidity	0 to 95% relative
Alarm Output	NPN open collector ON state when phase-locked
Alarm Response Time	50 ms, maximum
Power Requirements	+24V dc ±1V, at 150 mA -12V dc ±1V, at 150 mA
Dimensions	See figure 10-19
Weight	2 lb, 13 oz
Construction	Milled aluminum

10.1.2 Construction

The components of the downconverter are housed in an L-shaped chassis that is bolted into position within the mainframe of the receiver. Connections to the incoming RF signal are made through connectors on the receiver rear panel, as are input and output connections from the first LO and the main IF signal output. Connections to the other modules within the receiver are made by coaxial patch cables at the rear-panel connectors (refer to paragraph 2.4 in the "Mainframe" section).

10.1.3 Circuit Description

Figure 10-2 is a block diagram of the Series 411 Downconverter. The function of the downconverter is to select the desired receive channel frequency and convert the incoming signal to an IF of 70 MHz. This is accomplished in two frequency conversions. The first conversion is to an IF of 1112.5 MHz. At this IF, signals are amplified, filtered, and then further converted to 70 MHz. Figure 10-6 is the downconverter schematic diagram.

10.1.3.1 Bandpass Filter (FL1). Signals entering the downconverter first pass through input bandpass filter FL1, which has a passband from 3.7 to 4.2 GHz. Its function is to provide image rejection for the first conversion and rejection of out-of-band signals while passing all in-band received signals to subassembly A1, the first-mixer preamplifier unit.

10.1.3.2 First Mixer Stage (A1). The mixer-preamplifier selects the desired signal within the 3.7- to 4.2-GHz band according to the frequency supplied by phase-locked multiplier A2, operating as a local oscillator.

A2 provides a net frequency multiplication of 48 and provides sufficient power output in the 4.8- to 5.3-GHz range to drive the first mixer.

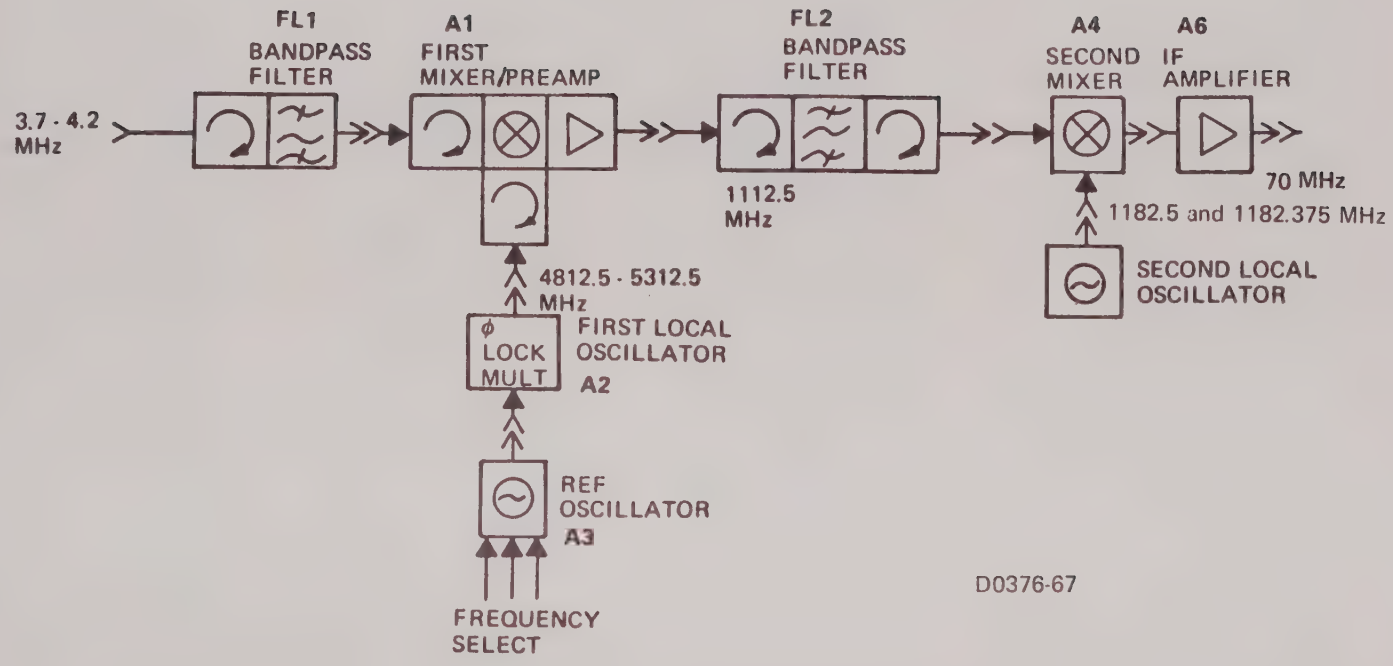

Figure 10-2. Series 411, 125-kHz Downconverter - - Block Diagram

The desired signal (f_o) is selected by applying a local oscillator frequency of (f_o + 1112.5) MHz to A1, which results in the desired signal being converted to an IF of 1112.5 MHz. The reference-oscillator frequency is determined by the relationship

$$F_{ref} = \frac{f_o + 1112.5 \text{ MHz}}{48}$$

The reference frequency is provided by a thumbwheel-controlled internal synthesizer. The reference frequency source for phase lock- multiplier A2 operate in the 100- to 110-MHz range.

After mixing and conversion to the first IF of 1112.5 MHz, a preamplifier in the mixer-preamplifier assembly amplifies the signal and sets the noise figure of the downconverter.

10.1.3.3 VHF Synthesizer (A3). The VHF synthesizer provides a reference to the X48 phase-lock multiplier in the range of 100.2604167 MHz to 110.6770833 MHz in 5.20833333-kHz increments. All frequencies outside the receive and exciter bands turn the synthesizer output off. This eliminates the transmission or reception of out of band frequencies.

Special features of the VHF synthesizer are:

a. Output muting for an out-of-lock mode with fail-safe open collector alarm output.

b. Optional external reference input for high stability. The external reference frequency is 5 MHz.

The standard synthesizer is part number 142260. The version designed to accommodate the external reference frequency input is part number 153500. These synthesizers are also used in the Series 461 exciters.

10.1.3.4 Bandpass Filter (FL2). Following the preamplifier, the 1112.5-MHz first IF signal is filtered by FL2 to a bandwidth of 40 MHz, which serves to suppress adjacent-channel signals and provides image rejection for the second mixer.

10.1.3.5 Second Mixer (A4) and IF Amplifier (A6). The second mixer (A4) provides the final conversion to the 70-MHz IF. The local oscillator for this conversion is a switchable frequency source (A5) operating at 1182.5 MHz and 1182.375 MHz. Following conversion to 70 MHz, amplifier (A6) provides approximately 11 dB of gain at 70 MHz. Figure 10-3 shows gain distribution in the downconverter.

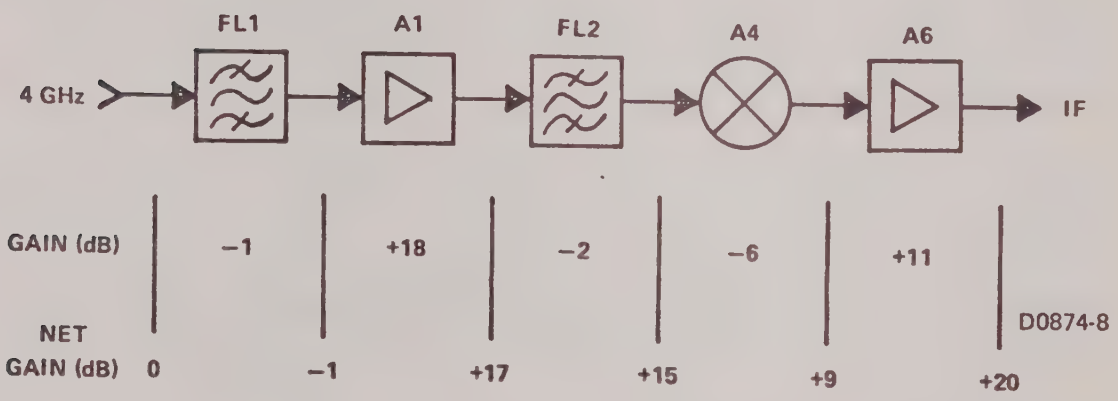

Figure 10-3. Downconverter Gain Distribution

10.1.4 Controls and Indicators

All controls are on the downconverter front panel.

10.1.4.1 Frequency Synthesizer Selector (A12). Frequency selection is accomplished by the five-section FREQUENCY SELECT thumbwheel switch, which reads 3700.000 MHz to 4299.875 MHz in 0.125-MHz steps for the receiver and 5900.000 MHz to 6499.875 MHz in 0.125-MHz steps for the exciter. Table 10-3 shows the program codes for receiver frequencies.

10.2 MAINTENANCE

10.2.1 Downconverter Removal and Replacement

Multiplier (A2) and source (A5), figure 10-4, can be removed without taking the downconverter out of the mainframe. If the downconverter must be removed from the mainframe, the following procedure is recommended.

a. Remove power from the receiver and slide the unit out of the rack as far as it will go. Take off the top cover.

b. Unscrew and remove the four nuts and lockwashers at A, B, C, and D (figure 10-4) in the baseplate of the downconverter. Also remove the screw at E, leaving the spacer attached to the mainframe. Remove the screw at F, leaving the spacer attached to the downconverter

c. Disconnect all cables between the downconverter and the mainframe.

CAUTION

The coaxial cables are delicate and can be easily damaged. Do not bend or twist any more than is necessary.

d. Looking at the front of the downconverter, rotate the unit clockwise enough to clear the lip in the mainframe, then lift the downconverter out of the chassis. Be carefule not to damage the cables and other wiring at the rear.

TABLE 10-3. VHF SYNTHESIZER RECEIVE FREQUENCIES PROGRAM CODE CHART

FREQ* (MHz)	Pin numbers on the back of J1 ⚠																	
	1	14	2	15	3	16	4	5	17	20	8	21	9	22	10	24	12
3700.000	0	0	X	X	X	0	X										
3800.000	0	0	X	X	X	X	0										
3900.000	0	0	X	X	X	X	X										
4000.000	0	X	0	0	X	X	X										
4100.000	0	X	0	0	X	X	X										
4200.000	0	X	0	X	0	0	0										
0000.000								0	X	X	0						
0010.000								0	X	X	X						
0020.000								X	0	0	0						
0030.000								X	0	0	X						
0040.000								X	0	X	0						
0050.000								X	0	X	X						
0060.000								X	X	0	0						
0070.000								X	X	0	X						
0080.000								X	X	X	0						
0090.000								X	X	X	X						
0000.000	⚠1 All measurements are made from the back of connector J1, inside the synthesizer unit. X = -5V dc 0 = Ground or Open											0	X	X	0		
0001.000												0	X	X	X		
0002.000												X	0	0	0		
0003.000												X	0	0	X		
0004.000												X	0	X	0		
0005.000												X	0	X	X		
0006.000												X	X	0	0		
0007.000												X	X	0	X		
0008.000												X	X	X	0		
0009.000												X	X	X	X		
0000.000	*Assumes output into X48 phase-locked multiplier and 1112.5 MHz IF; actual output frequency may be calculated by: $F_{out} = \frac{F_{chart} + 1112.5}{48}$															0	0
0000.125																0	0
0000.250																0	X
0000.375																0	X
0000.500																X	0
0000.675																X	0
0000.750																X	X
0000.875																X	X

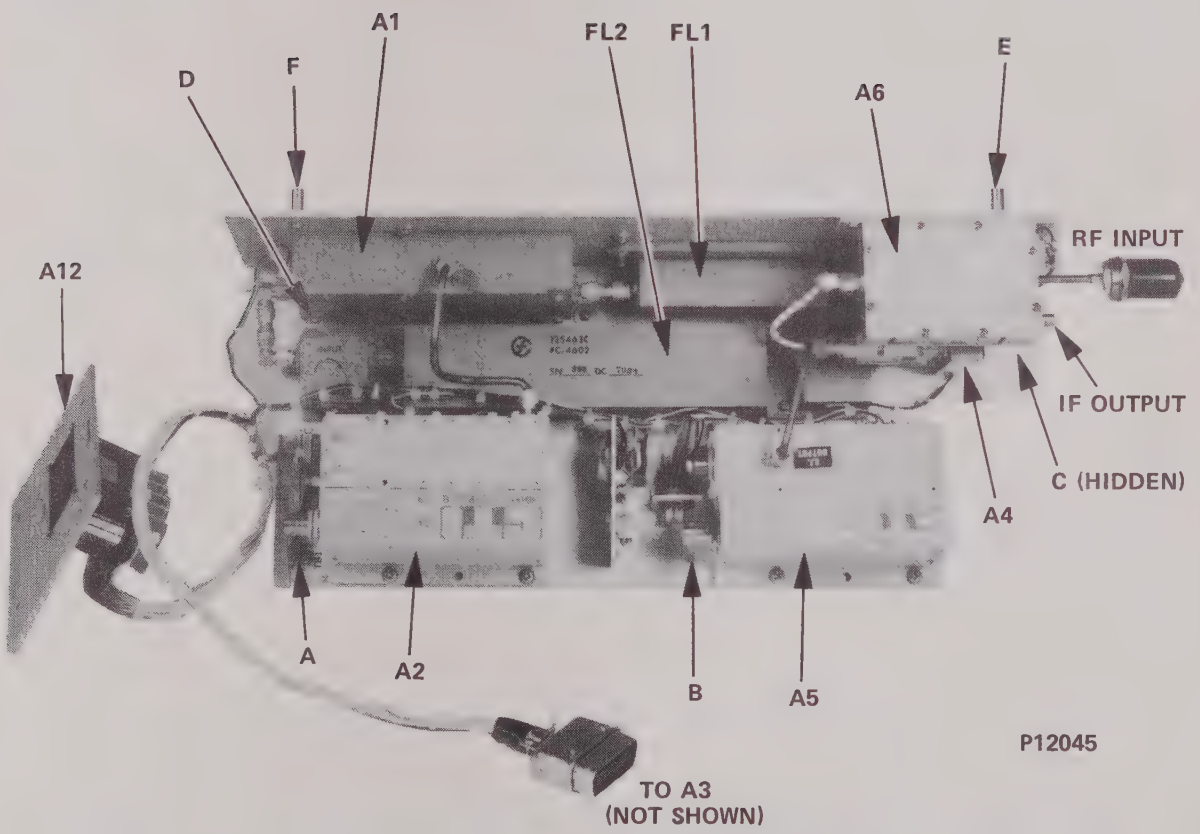

Figure 10-4. Top View of Downconverter

To replace the downconverter in the mainframe, the reverse of the above procedure can be used. However, the following tip will greatly facilitate replacement. Insert the four screws through the bottom of the mainframe chassis (holes A, B, C and D--figure 10-4) and tape them in position with masking tape over their heads. Then drop the 1/8-inch spacers over the screws from the top. Lower the downconverter into position on the screws, install the lockwashers and nuts, and tighten.

10.2.2 Downconverter Adjustment and Testing

Scientific-Atlanta Test Procedure No. 201259 is reproduced on the following pages and can be used to verify that the downconverter is operating properly. No adjustments should be required during normal operation.

10.2.3 Synthesizer Repair

Due to the proprietary nature of the synthesizers, detailed theory of operation and engineering drawings are not provided. If a downconverter failure appears to originate in the synthesizer, consult the factory.

10.3 DRAWINGS AND REPLACEMENT PARTS LIST

Parts lists and drawings are grouped together in this manual for greater ease in associating the correct parts lists with a particular configuration. Assembly drawings are followed by schematic diagrams (where appropriate) and the parts list for that assembly.

APPLICATION		
QTY REQD	NEXT ASSY	USED ON
N/A	FINAL	411

REVISIONS			
REV	DESCRIPTION	DATE	APPROVED

REV | SH 1 | DWG NO. 201259

SHEET																															
REV																															
REV STATUS OF SHEETS	SHEET	1	2	3	4	5	6	7	8	9	10	11	12	13	14																
	REV																														

ALL DIMENSIONS ARE IN INCHES UNLESS OTHERWISE SPECIFIED

TOLERANCES
3 PLACE DECIMAL ± .005
2 PLACE DECIMAL ± .02
1 PLACE DECIMAL ± .1

FRACTIONS ± ANGLES ±0° 30'

MAX SURFACE ROUGHNESS ALL MACHINED SURFACES EXCEPT AS NOTED 125 √

BREAK SHARP EDGES AND CORNERS .010 MAX

FINISH

CONTRACT NO.

DWN	L. Arnold	1/3/80
ENGR	R. Trapp	1/7/80
CHK	Joe D. Williams	1-8-80
PROD		
APVD		
APVD		

Scientific-Atlanta
3845 Pleasantdale Road
Atlanta, Georgia 30340

TEST PROCEDURE
MODEL 411 DOWNCONVERTER 125 KHz STEPS

SIZE	FSCM NO.	DWG NO.	REV
A	10110	201259	

SCALE

SHEET 1 of 14

SA434-179

1.0 SCOPE

The purpose of this procedure is to accomplish the alignment and overall performance testing of the 411WB(D) 3.7 to 4.2 GHz, 125 KHz steps Downconverter.

2.0 TEST EQUIPMENT REQUIRED

The following equipment (or equivalent) is required.

a. Sweep Generator, H-P 8620B, 86241A
b. Oscilloscope, H-P 1200 AR
c. Crystal Detector, Weinschel 1112
d. 50 to 75 ohm Adapter, 6 dB
e. Microwave Link Analyzer, H-P
f. Upconverter, 3.8 to 4.2 GHz
g. Power Meter, H-P 435A
h. Spectrum Analyzer, H-P
i. Noise Figure Indicator, AIL Type 75
j. Solid State Noise Generator, 1.0 to 12.4 GHz
k. Kay Amplifiér, Model 1024A
l. Wave Meter H-P 536A
m. Step Attenuator High Frequency 10 and 1 dB steps

3.0 ALIGNMENT AND TEST PROCEDURE

3.1 -20 Volt Regulator Check

Measure and record on the data sheet, the output voltage of the -20V dc regulator (A7).

3.2 Local Oscillator Levels

a. Measure and record on the data sheet, the output level of the first local oscillator (A2) at a low, mid and high operating frequency.

Designation	Receive Frequency	LO Operating Frequency	Synthesizer Reference Frequency
Low	3.72 GHz	4.8325 GHz	100.677 MHz
Mid	3.96 GHz	5.0725 GHz	105.677 MHz
High	4.16 GHz	5.2725 GHz	109.843 MHz

An operating frequency that roughly corresponds to any of those listed above can be substituted. If no synthesizer is supplied, a signal generator (H-P 608 or equivalent) can be substituted. The generator level should be 0 dBm.

NOTE

The synthesizer or external reference frequency (F_r) that will yield a desired receiver operating frequency (F_o) can be determined using the expression:

$$F_r = \frac{F_o + 1112.5}{48} \text{ MHz}$$

b. Measure and record on the data sheet, the output level of the second local oscillator (A5) at the output of AT1.

c. Measure and record on the data sheet, the output frequency of second L. O. (A5) at the output of AT1. The output frequency should be 1182.5 MHz with thumbwheel setting of 3700.000 MHz and 1182.375 MHz with thumbwheel setting of 3700.125 MHz.

3.3 Return Loss Measurements

3.3.1 Input Return Loss

a. Check the input return loss of the downconverter.

NOTE

This measuremnt should be performed with the downconverter installed in the 411WB receiver mainframe.

b. This measurement may be performed with a slotted line or swept frequency technique. Record the VSWR on the data sheet at the frequencies listed.

3.3.2 Output Return Loss

Check the output return loss of the downconverter with the MLA. With the downconverter installed in the 411WB mainframe this can be done at connector J114. Adjust C7 in the IF preamplifier for best return loss (greater than 26 dB). Record the return loss on the data sheet.

3.4 RF to IF Gain and Flatness

a. The downconverter should provide 20 dB ±2 dB of gain from the RF input to the IF output over its operating range (3.7 to 4.2 GHz). Also the IF output should be flat to within ±0.25 dB over a bandwidth of 70 ±18 MHz. The gain and flatness should be measured at low, mid, and high operating frequencies. Also verify that the downconverter properly selects and provides RF gain at all frequencies for which it is equipped.

b. Connect the test equipment as shown in figure 1 (A). With the step attenuator set to 0, adjust the CW output of the sweep generator (at an approximate frequency of 4 GHz) for a 0 dBm reading on the power meter.

c. Connect the test equipment as shown in figure 1 (B). Switch in 20 dB of attenuation with the step attenuators. Adjust the sweep generator for a sweep

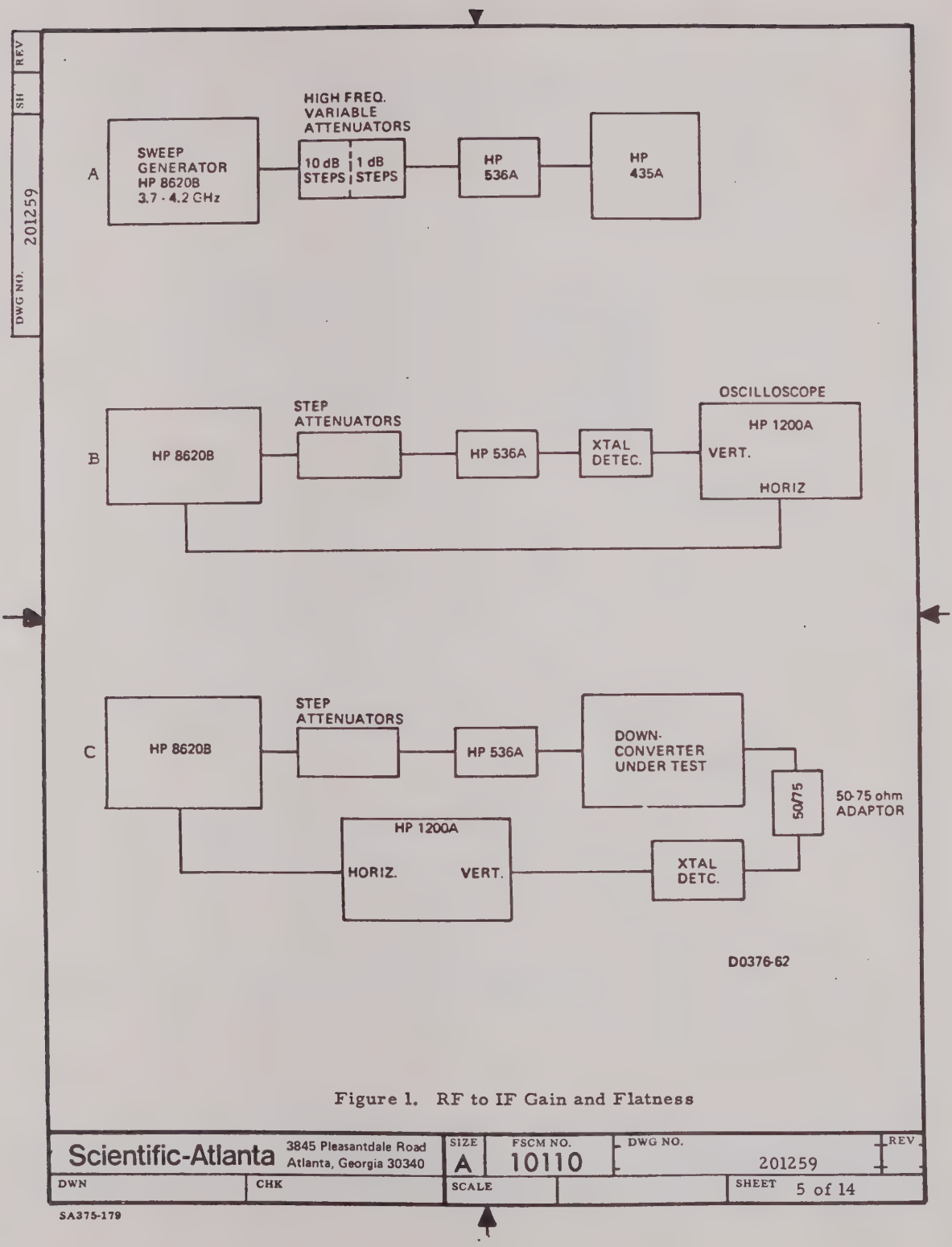

Figure 1. RF to IF Gain and Flatness

Scientific-Atlanta 3845 Pleasantdale Road Atlanta, Georgia 30340	SIZE A	FSCM NO. 10110	DWG NO. 201259	REV
DWN	CHK	SCALE		SHEET 5 of 14

SA375-179

width of 40 MHz around a center frequency in the downconverters operating range (3.7 to 4.2 GHz). Adjust the oscilloscope controls for display having the base line along the bottom graticule and the signal trace along the top graticule.

NOTE

The test cable which will be used to connect the test equipment to the downconverter should also be included in this test set-up. This cable should have excellent characteristics in the 3.7 to 4.2 GHz frequency range. With the equipment connected as shown in figure 2B, tune the sweep generator along this frequency range and note the ripple present on the signal trace. If this ripple is more than 0.1 dB a better test cable should be selected or an isolator placed at the end of the cable.

The oscilloscope is now calibrated for a -20 dBm full-scale deflection.

d. Connect the test equipment as shown in figure 1 (C). Set the attenuators to 34 dB. Set the sweep generator to the designated mid frequency. Insure that the reference frequency to the first LO is correct to receive the sweep generator signal. If the signal trace returns to the top graticule with the base line trace on the bottom graticule, the downconverter is providing exactly 20 dB of gain. (The -34 dBm input signal together with the -6 dB loss of the 50- to 75-ohm adaptor creates an effective -40-dBm signal.) By increasing or decreasing the attenuator in 1 dB steps until the signal trace is along the top graticule line the actual gain of the downconverter can be determined.

e. With the signal trace positioned along the top graticule line, measure the flatness (70 ±18 MHz). The top .8 cm of the scope display corresponds to a flatness of ±0.25 dB. The output flatness is adjusted by C1 in the IF preamplifier module of the downconverter. Record the gain and flatness on the data sheet.

f. Repeat steps d and e for the designated low and high frequencies. Also check any other operating frequencies for which the downconverter is equipped. Slight readjustment of C1 may be required to insure best flatness for all frequencies.

g. The output return loss of the downconverter should also be rechecked at this point because C1 and C7 have a some interaction.

3.5 RF to IF Group Delay

a. The purpose of this test is to measure the RF to IF group delay of the downconverter. To do this a test upconverter is necessary. A mixer, two isolators and a signal generator can be used in its place. This arrangement is shown in figure 2.

b. Calibrate the MLA back-to-back for a display with 70 MHz centered and markers at ±18 MHz. Vertical sensitivity should be set to 1 nsec/cm. The deviation should be set to approximately 300 kHz.

c. Connect the test upconverter and downconverter to the MLA as shown in figure 2. Group delay should be measured at the designated low, mid, and high frequencies. With the downconverter set to receive the appropriate signal, tune the H-P 8620 signal generator slowly up scale until the trace appears on the MLA. Continue tuning until the 70-MHz marker is centered. Adjust the signal generator level and the MLA attenuators to center the MLA level meter. Measure the total, parabolic, and linear delay as illustrated in figure 3 and the examples below. Record group delay values on the data sheet.

Linear Delay = maximum at marker - minimum at marker

In figure 3, this is: 4.0 ns - 3.2 ns = 0.8 ns

$$\text{Parabolic Delay} = \frac{\text{maximum at marker} + \text{minimum at marker}}{2}$$

In figure 3, this is: $\frac{4.0\text{ ns} + 3.2\text{ ns}}{2} = 3.6\text{ ns}$

$$\text{Ripple} = \frac{\text{maximum peak-to-peak in 1 cycle (in ns)}}{F_2 - F_1\ (\text{in MHz})}$$

(These quantities must be judged as closely as possible.)

In figure 3, this is: $\frac{0.25\text{ ns}}{65\text{ MHz} - 56\text{ MHz}} = \frac{0.25\text{ ns}}{9\text{ MHz}} = 0.028\text{ ns/MHz}$

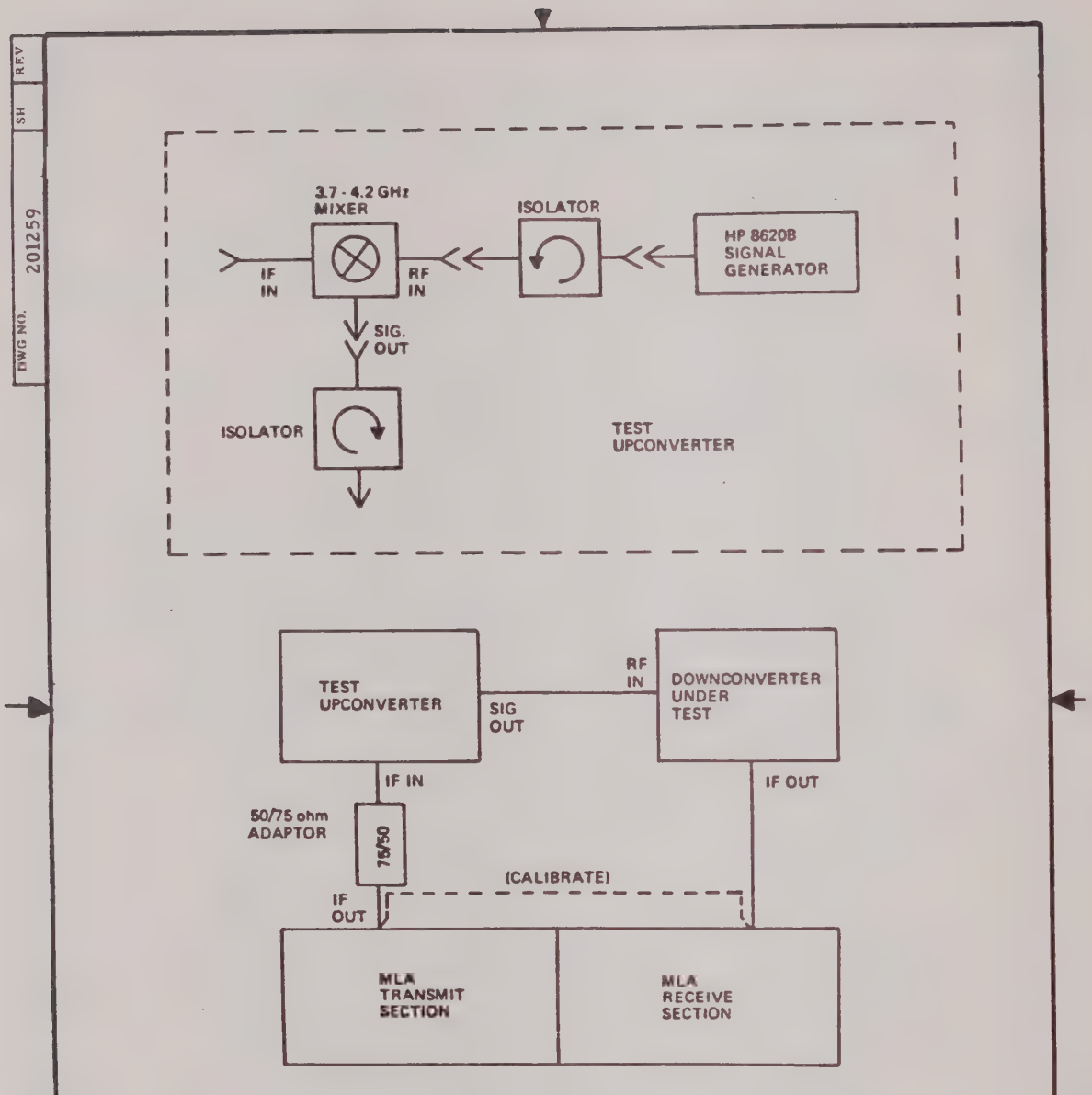

Figure 2. RF to IF Group Delay

Scientific-Atlanta 3845 Pleasantdale Road Atlanta, Georgia 30340		SIZE A	FSCM NO. 10110	DWG NO. 201259	REV
DWN	CHK	SCALE		SHEET 8 of 14	

SA375-179

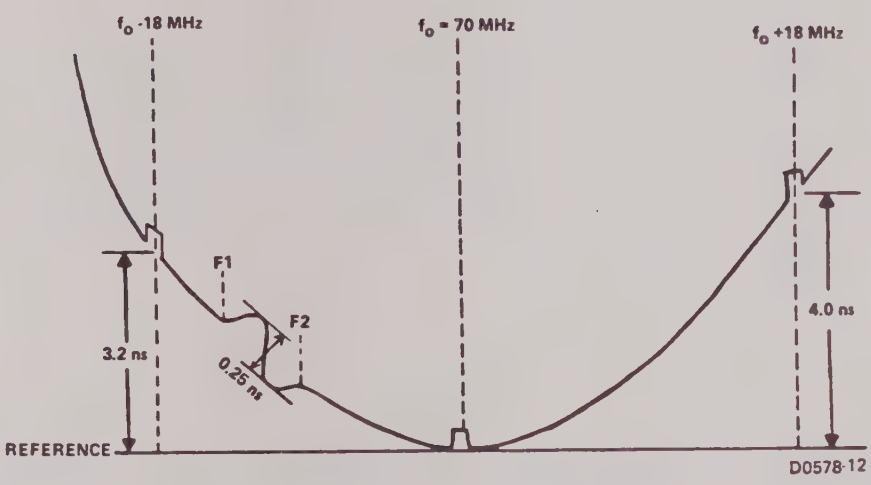

Figure 3. Measurement of Group Delay

Scientific-Atlanta 3845 Pleasantdale Road Atlanta, Georgia 30340	SIZE A	FSCM NO. 10110	DWG NO. 201259	REV
DWN	CHK	SCALE		SHEET 9 of 14

SA375-179

3.6 Noise Figure

a. Connect the test equipment as shown in figure 4.

b. Measure and record, on the data sheet, the noise figure at the low, mid, and high frequencies.

3.7 Downconverter Spurious Responses

a. Connect the test equipment as shown in figure 5.

b. At each frequency to be tested tune the signal generator (8620B) over the 3700-4200 MHz range, and observe the IF output on the spectrum analyzer. All spurious responses should be greater than 60 dB below the desired IF signal. The input level to the downconverter should be maintained at -30 dBm.

c. The spurious response test should be run at the low, mid, and high frequencies. Check OK on the data sheet.

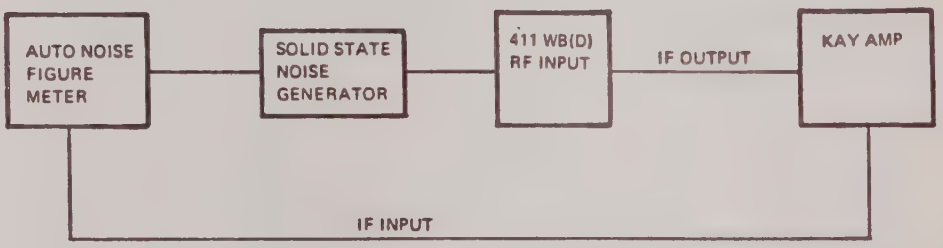

Figure 4. Noise Figure Test

Scientific-Atlanta 3845 Pleasantdale Road Atlanta, Georgia 30340		SIZE A	FSCM NO. 10110	DWG NO. 201259	REV
DWN	CHK	SCALE		SHEET 10 of 14	

5A375-179

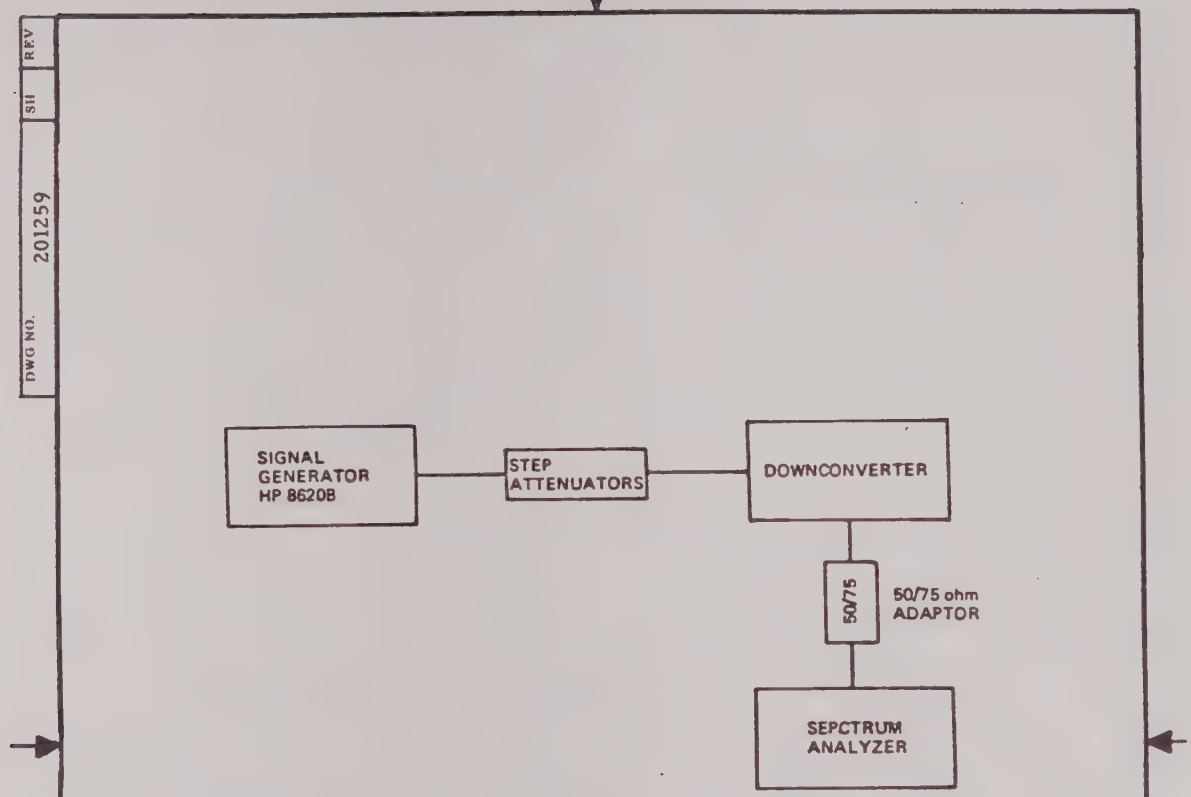

Figure 5. Spurious Response Test

Scientific-Atlanta 3845 Pleasantdale Road Atlanta, Georgia 30340		SIZE A	FSCM NO. 10110	DWG NO. 201259	REV
DWN	CHK	SCALE		SHEET 11 of 14	

SA375-179

TEST DATA SHEET
125 KHz STEPS DOWNCONVERTER

MODEL 411WB (D)-3.7-4.2 PN 209397 SN_____

Date_____ Technician_____

Approved_____

3.1 -20 VOLT REGULATOR CHECK

Measured	Required
_____V dc	20.0 ±1.0 V dc

3.2 LOCAL OSCILLATOR LEVELS

3.2.a 1st LO, Module A2

Frequency	Measured	Required
Low_____GHz	_____dBm	+10 to +15 dBm
Mid_____GHz	_____dBm	+10 to +15 dBm
High_____GHz	_____dBm	+10 to +15 dBm

3.2.b 2nd LO, Module A5 (Measured at the output of AT1)

Measured	Required
_____dBm	+11 to +15 dBm

3.2.c 2nd LO Module A5 (Measured at the output of AT1)

Measured	Required
_____MHz	1182.5 MHz @ 3700.000
_____MHz	1182.375 MHz @ 3700.125

Scientific-Atlanta 3845 Pleasantdale Road Atlanta, Georgia 30340	SIZE A	FSCM NO. 10110	DWG NO. 201259	REV
DWN	CHK	SCALE		SHEET 12 of 14

SA375-179

3.3 RETURN LOSS MEASUREMENTS

3.3.1. Input Return Loss

Frequency	Return Loss (VSWR)	Required (VSWR)	Required Return Loss
3.7 GHz	_____	1.15:1	>23 dB
3.8 GHz	_____	1.15:1	>23 dB
3.9 GHz	_____	1.15:1	>23 dB
4.0 GHz	_____	1.15:1	>23 dB
4.1 GHz	_____	1.15:1	>23 dB
4.2 GHz	_____	1.15:1	>23 dB

3.3.2 Output Return Loss

Measured	Required
_____dB	>26 dB

3.4. RF TO IF GAIN AND FLATNESS

3.4.e The downconverter RF-IF gain and gain flatness is measured at low-, mid-, and high-band frequencies. (While set up for this test, verify that the downconverter properly selects and provides RF gain at all frequencies for which it is equipped.)

Frequency	Measured Gain	Flatness (F_o ±18 MHz)	Required Gain	Required Flatness
Low___MHz	_____dB	_____dB	20.0 ±2 dB	±.25 dB
Mid___MHz	_____dB	_____dB	20.0 ±2 dB	±.25 dB
High___MHz	_____dB	_____dB	20.0 ±2 dB	±.25 dB

Check of all frequencies:_____OK

3.5. RF to IF GROUP DELAY

3.5.c Measure and record RF-IF Group Delay at low-, mid-, and high-band frequencies using the MLA and 4-GHz Upconverter.

Frequency	Parabolic (3.25 ns, max)	Linear (1.10 ns, max)	Ripple (0.03 ns/MHz, max)
Low_____MHz	_____ns	_____ns	_____ns/MHz
Mid _____MHz	_____ns	_____ns	_____ns/MHz
High_____MHz	_____ns	_____ns	_____ns/MHz

3.6. NOISE FIGURE

3.6.b Measure and record the downconverter noise figure at low-, mid-, and high-band frequencies.

Frequency	Measured NF	Required NF
Low_____MHz	_____dB	14.0 dB, Max
Mid_____MHz	_____dB	14.0 dB, Max
High____MHz	_____dB	14.0 dB, Max

3.7. DOWNCONVERTER SPURIOUS RESPONSES

3.7.c Measure and record spurious responses at low-, mid-, and high-band frequencies.

Frequency	Check	Required
Low_____MHz	_____OK	>60 dB down
Mid_____MHz	_____OK	>60 dB down
High_____MHz	_____OK	>60 dB down

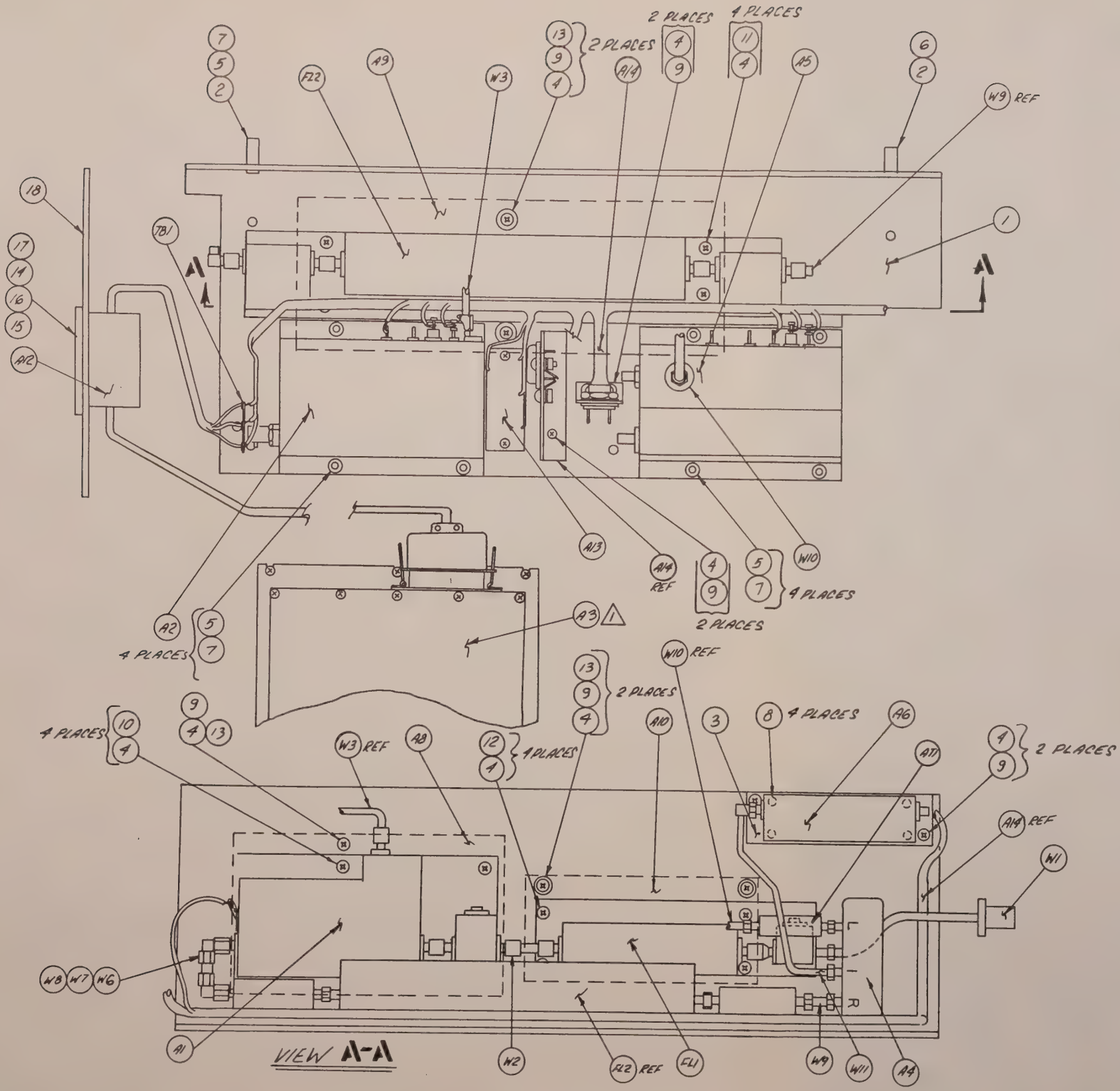

NOTES:

1. ITEMS (4) & (10) QUANTITY OF 8 EACH TO BE SUPPLIED W/ A3 AND INSTALLED AT NEXT ASSY.

209397-

Figure 10-5. 125 kHz Downconverter, Assembly

PARTS LIST

209397 125 kHz Downconverter

ITEM	COMPONENT	DESCRIPTION	MFR	FSCM	MFR PART NUMBER
	0209388	DN CONV. AGILE SYNTH 125 KHZ SCHEMATIC			
1	0132346	CHASSIS, DUAL CONVERSION DOWN CONVERTER			
2	0072950	SPACER 6-32 ID 1/4 OD 1/2 L NI PLT BRS	FS	73734	9154
3	0144043	PLATE,MOUNTING,IF PREAMP			
4	0072365	WASHER NO. 4 LOCK, EXT TOOTH, CAD PL STL	XZ		ANSI B18.21.1
5	0072360	WASHER NO. 6 LOCK, EXT TOOTH, CAD PL STL	XZ		ANSI B18.21.1
6	0078994	SCREW 6-32 X 3/8 F HD,100 DEG,SST	XZ		PER MS24693-C26
7	0072362	SCREW 6-32 X 3/8 PAN HD,SST	XZ		PER MS51957-28
8	0078986	SCREW 2-56 X 3/8 F HD,100 DEG,SST	XZ		BY DESCRIPTION
9	0072317	SCREW 4-40 X 1/4 PAN HD,SST	XZ		PER MS51957-13
10	0072319	SCREW 4-40 X 5/16 PAN HD,SST	XZ		PER MS51957-14
11	0072334	SCREW 4-40 X 5/8 PAN HD,SST	XZ		PER MS51957-18
12	0072329	SCREW 4-40 X 7/16 PAN HD,SST	XZ		PER MS51957-16
13	0184387	WASHER-NO. 4- .125 .438 .040 CAD PL STL	XZ		ANSI B18.22.1
14	0072358	SCREW 2-56 X 5/16 PAN HD,SST	XZ		PER MS51957-4
15	0183966	WASHER-NO. 2- .094 .250 .020 CAD PL STL	XZ		ANSI B18.22.1
16	0077181	WASHER NO. 2 LOCK, SPLIT, CAD PLT STL	XZ		ANSI B18.21.1
17	0071403	NUT 2-56 UNC-2B,PLAIN-HEX,SST	XZ		PER MS35649-224
18	0134189	PANEL ENGRAVED DOWNCONVERTER WITH SYNTH.			
A1	0125415	MIXER/PREAMP PER S-A SPEC 125415			
A2	0128004	SIG SOURCE AUTO PHASE LOCK 4.81-5.31 GHZ			
A3	0142261	VHF SYNTHESIZER			
A4	0129006	MIXER 1-2 GHZ	XZ		PER SA SPEC 128006
A5	0209391	DUAL SIGNAL SOURCE 1182.5/1182.375			
A6	0121963	IF PREAMPLIFIER ASSEMBLY			
A7	0078600	NOT ASSIGNED			
A8	0144046	BACKING PLATE			
A9	0144048	BACKING PLATE			
A10	0144050	BACKING PLATE			
A11	0078600	NOT ASSIGNED			
A12	0209405	THUMBWHEEL SWITCH CABLE ASSY 125KHZ			
A13	0210814	PWR ASSEMBLY DUAL SOURCE SWITCH			
A14	0209395	HARNESS ASSY 125KHZ DCWN CONV.			
AT1	0082948	ATTNUATR 12 DB 1/2W WITH SMA CONN	ESS	32424	AT-51-12/SMA
FL1	0125429	FILTER BANDPASS 3.7-4.2 GHZ	XZ		PER SA SPEC 125429
FL2	0125463	FILTER BANDPASS 1112.5 MHZ W/ISOLATORS	XZ		PER SA SPEC 125463
TP1	0073001	TERMINAL STRIP 3 LUG CENTER GROUND	CM	71785	52A
W1	0127383	CABLE ASSY RF INPUT 50 OHM TYPE N-OSM			
W2	0082260	CONN COAX SMA MALE TO MALE	AMN	26805	2081-0000
W3	0132531	CABLE ASSY 1ST LO - MIXER PREAMP			
W4	0078603	NOT ASSIGNED			
W5	0078603	NOT ASSIGNED			
W6	0080372	CONN COAX SMA MALE TO FEMALE RT ANGLE	OSI	16179	OSM-219
W7	0082260	CONN COAX SMA MALE TO MALE	AMN	26805	2081-0000
W8	0080372	CONN COAX SMA MALE TO FEMALE RT ANGLE	OSI	16179	OSM-219
W9	0082260	CONN COAX SMA MALE TO MALE	AMN	26805	2081-0000
W10	0132534	CABLE ASSY 2ND LO - AT1			
W11	0132535	CABLE ASSY RG-188 3MM-3MM RT ANGLE			

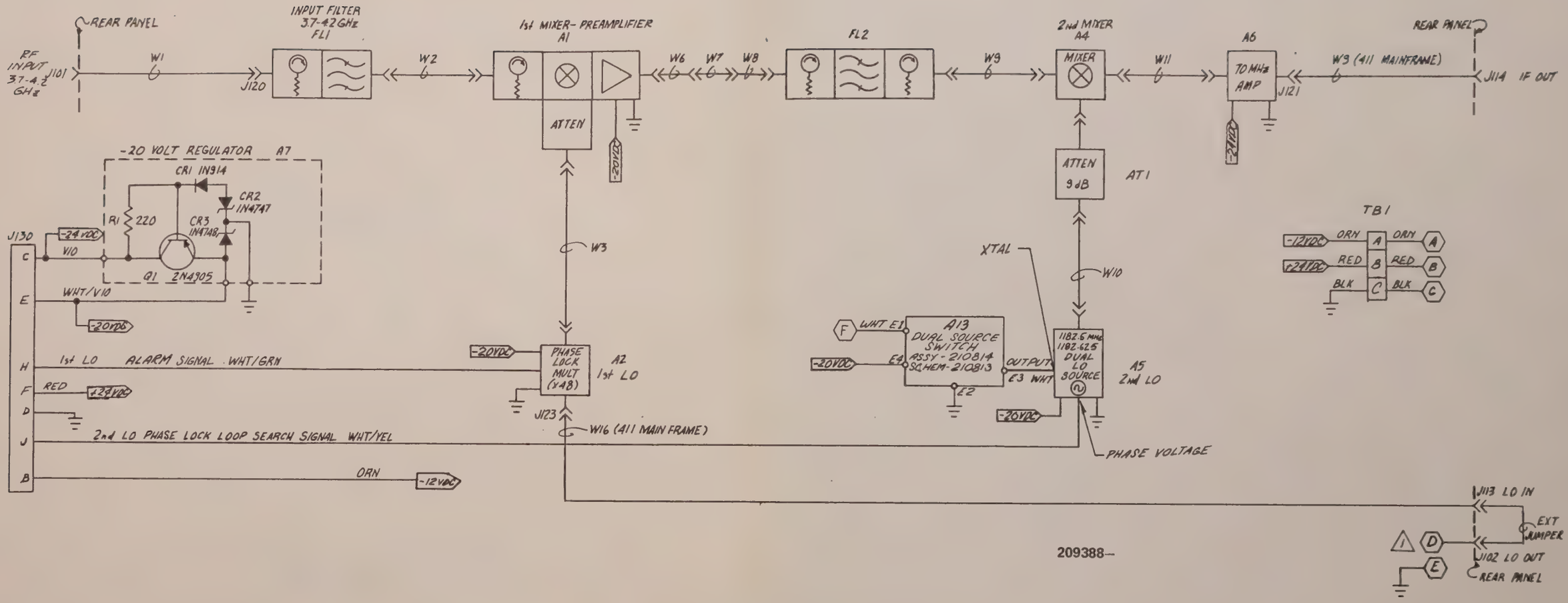

NOTES:

1. REFERENCE SIGNAL FROM SHT. 2.

Figure 10-6. 125 kHz Downconverter, Schematic (Sheet 1 of 2)

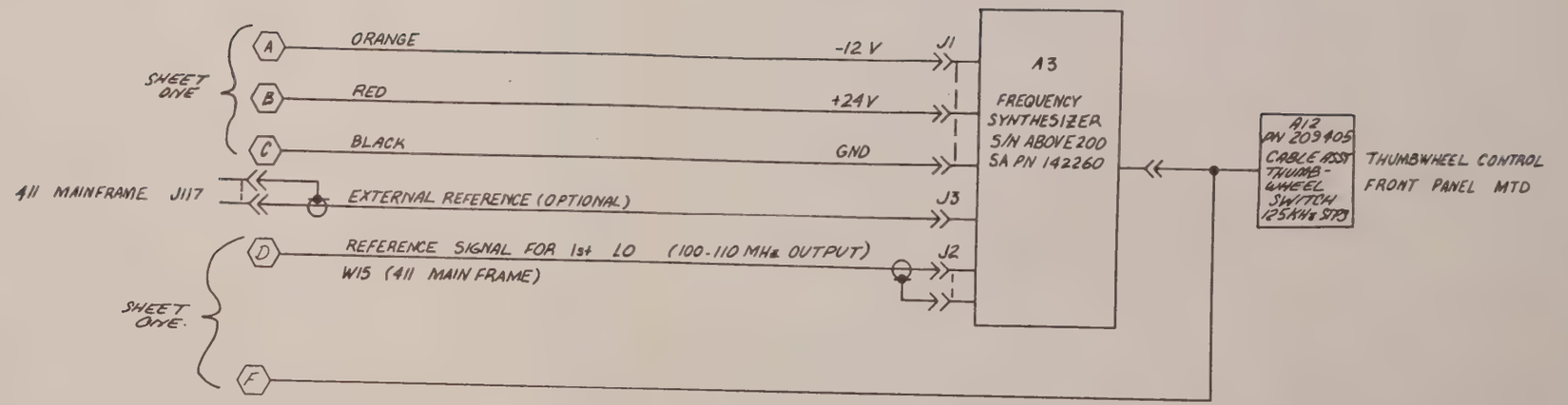

LOCAL SYNTHESIZER FREQUENCY CONTROL
AGILE DOWN CONVERTER

Figure 10-6. 125 kHz Downconverter, Schematic (Sheet 2 of 2)

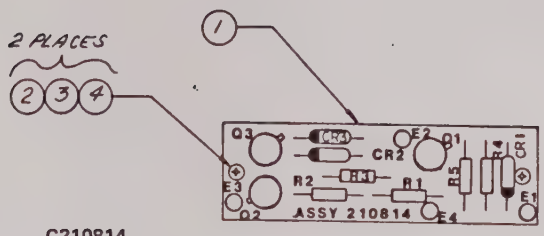

C210814–

Q3	1	77148	TRANSISTOR	2N3251 PNP SIL		
Q2	1	77147	TRANSISTOR	2N3947 NPN SIL		
Q1	1	77148	TRANSISTOR	2N3251 PNP SIL		
R5	1	75678	RESISTOR	47K OHM 1/4W 5% COMP		
R4	1	74727	RESISTOR	10K OHM 1/4W 5% COMP		
R3	1	75678	RESISTOR	47K OHM 1/4W 5% COMP		
R2	1	74727	RESISTOR	10K OHM 1/4W 5% COMP		
R1	1	74727	RESISTOR	10K OHM 1/4W 5% COMP		
CR3	1	71122	DIODE	1N914		
CR2	1	71122	DIODE	1N914		
CR1	1	71122	DIODE	1N914		
4	2	75936	WASHER	#2 LOCK, INT		
3	2	77630	SPACER	4-40 10 3/16 OD 1/4		
2	2	77180	SCREW	2-56 X 7/16 PAN HD		
1	1	210812	PWB DUAL SCE SW			
	0	210813	SCHEMATIC DIAG	DUAL SCE SWITCH		
ITEM OR FIND NO	QTY REQD	DA STOCK NO	NOMENCLATURE OR DESCRIPTION	MATL SPEC AND SIZE OR COMPONENT VALUE	IDENTIFYING OR PART NO	PROM NO

C210814–

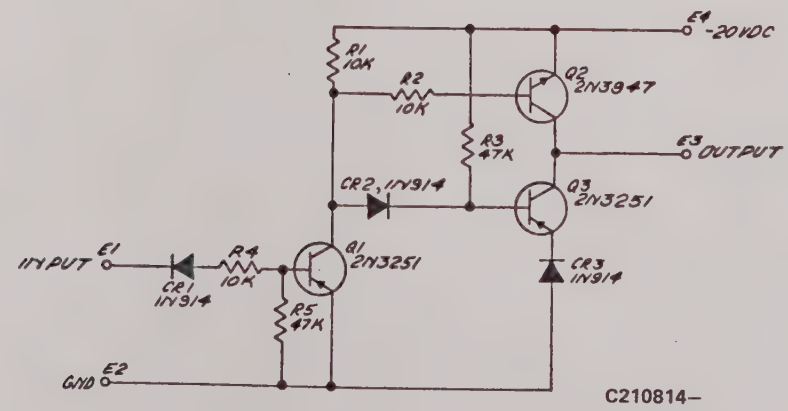

C210814–

Figure 10-7. Dual Source Switch, Assembly and Schematic

IMPORTANT NOTE

The information behind this tabbed divider may apply to more than one item. Check all pages carefully.

33R0602

IMPORTANT NOTE

The information behind this tabbed divider may apply to more than one item. Check all pages carefully.

33R0602

SECTION 13

IF AMPLIFIER---PART NO. 127183

13.1 DESCRIPTION

IF amplifier part no. 127183 is a plug-in module intended for operation with the Scientific-Atlanta Series 411 Receiver Equipment. Operating power is received from the main frame of the receiver. Frequency of operation is 70 MHz with a nominal overall AGC'd gain of 40 dB. Three outputs are provided, a main, an IF monitor, and an auxiliary output used to drive the mainframe CARRIER/NOISE meter.

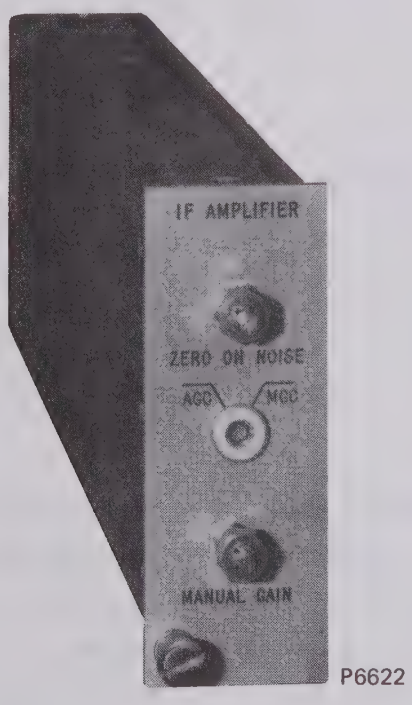

Figure 13-1. IF Amplifier--Part No. 127183

13.1.1 Technical Characteristics

Characteristic	Specification
Input	
Frequency	70 ± 20 MHz
Impedance	75 ohms unbalanced
Return Loss	>23 dB
Level	-5 dBm max
Output	
Impedence	75 ohms unbalanced
Return Loss	>20 dB
Level	-5 dBm (with AGC)
Gain	
AGC or MGC	0 to +40 dB
Flatness	0.5 dB P-P
Group Delay	<0.5-ns variation
Monitor Output	
Impedance	75 ohms unbalanced
Return Loss	<20 dB
Level	Within 1 dB of main output

13.1.2 Construction

All components are mounted on one circuit board attached to the left side cover of the module. Operating controls are on the front panel and the interface connector is on the rear of the module. Figure 13-2 shows the relationship of the circuits in the IF amplifier.

13.1.3 Circuit Description

The purpose of the IF amplifier is to provide signal amplification at the IF frequency and to provide automatic gain control of the signal in order to present a constant 70 MHz input level to the circuits that follow. Figure 13-3 is the IF amplifier schematic diagram.

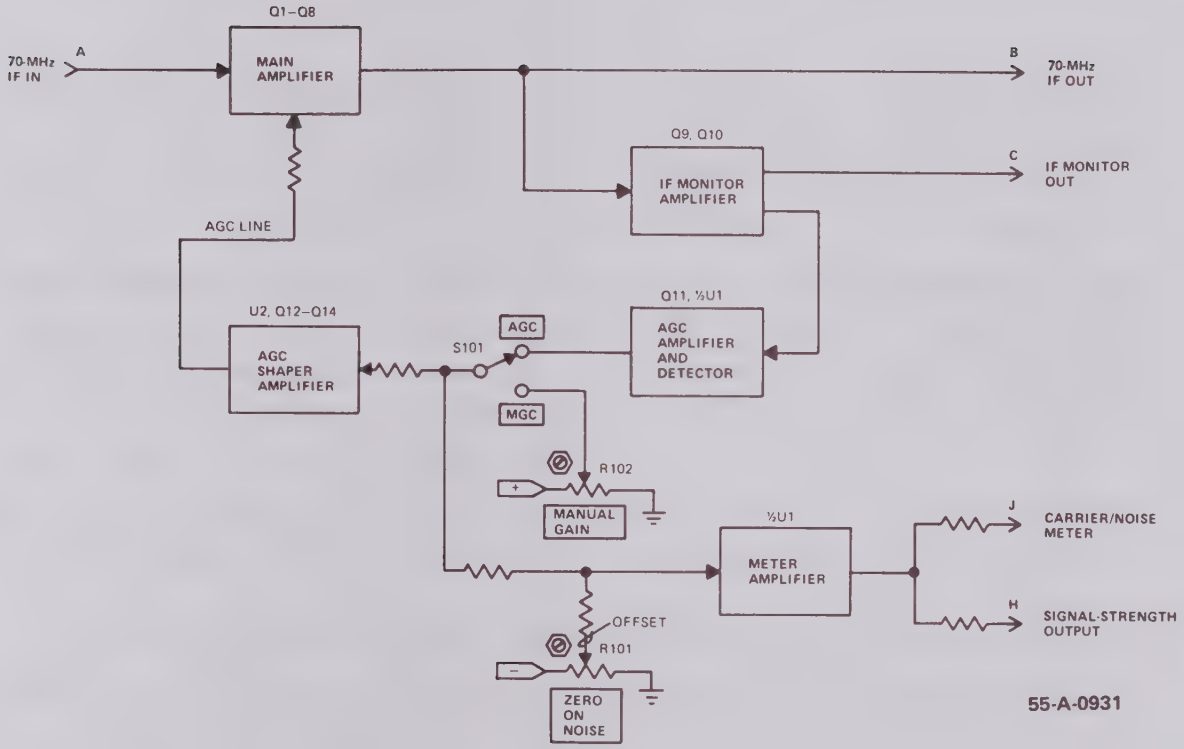

Figure 13-2. IF Amplifier Block Diagram

All IF amplification is provided by feedback-pair amplifiers consisting of two high-frequency transistors. The first amplification stage consisting of Q1 and Q2 is typical of all stages. Transistors Q1 and Q2 form an emitter-coupled feedback-pair amplifier. Feedback is provided from the emitter of Q2 to the base of Q1 by R4. Stage gain is determined by the ratio of the feedback resistor (R4) to the input resistor (R2). Resistor R1 and C2 provide input matching and gain-slope control for the stage. Feedback capacitor C3 provides high-frequency compensation.

PIN diodes CR1 and CR2 provide gain control between the first and second stages. Gain control is provided by varying the resistance of CR1 and CR2 with a current supplied through R7 by the AGC shaper. Each amplifier stage is broadband, having a frequency response to about 250 MHz. When all amplifiers are cascaded, an extremely flat frequency response is obtained between 50 and 90 MHz. A net signal amplification of 40 dB is provided by the four gain stages, Q1-Q8, each providing approximately 10 dB of gain. Three AGC interstages (CR1-CR6) provide a 40-dB AGC range.

Amplifier stage Q9-Q10 provides an isolated IF monitor output that is available for test purposes. This output level is the same level as the signal output.

Amplifier stage Q11 provides additional voltage gain for AGC detector CR7-CR8. The difference between the detected 70-MHz signal and a reference voltage provided by R44 is amplified by U1 and ultimately fed back to the AGC diodes to close the gain-control loop. The reference voltage supplied by R44 sets the output level of the IF amplifier.

The second section of U1 provides an inverted AGC voltage used to drive the signal-strength indicator in the receiver main frame. This voltage may be offset by a voltage from front-panel ZERO ON NOISE control R103. This potentiometer is used to "zero" the carrier/noise meter on a noise input.

Front-panel switch S101 opens the AGC loop in the MGC position and connects the gain-control circuitry to R102, the MANUAL GAIN control.

Prior to applying the AGC voltage developed in U1 to the AGC diodes, the voltage is shaped by U2, Q12-Q14, and associated circuitry. The purpose of this shaping network is to shape the AGC voltage such that a linear AGC voltage results in a linear gain change in dB. This enables the carrier/noise meter to be accurately calibrated.

13.2 MAINTENANCE

Refer to section 5 of this instruction manual for general maintenance information. Use a module extender to operate the IF amplifier from its normal position in the main frame during maintenance and adjustment.

It is not anticipated that any field adjustment will be required except in the event of failure of certain components. Should component replacement make realignment necessary, it is recommended that only adjustments associated with the affected circuit be made. The following procedures are presented to permit alignment and level settings.

13.2.1 Access to Circuit Boards

a. Remove eight screws from the top and bottom edges of the module.

b. Remove the six screws from the ends of the right cover (facing the front panel).

c. Pull off the right cover.

13.2.2 Alignment and Performance Testing

Scientific-Atlanta Test Procedure No. 132330 is reproduced on the following pages. It can be used to verify that the IF amplifier is operating properly. Refer to figure 13-3 for adjustment locations. No adjustments should be required during normal operation.

13.3 REPLACEMENT PARTS

A replacement parts list for the IF amplifier starts on page 13-7, immediately following the test procedure. This list contains descriptive information on those items that are considered replaceable in the IF amplifier. Refer to section 6 of this instruction manual for further information.

APPLICATION		REVISIONS			
NEXT ASSY	USED ON	SYM	DESCRIPTION	DATE	APPROVED
		A	General Revision	9-13-76	
		B	General Revision - Text Retyped	11-9-77	

REV																									
SHEET																									
REV STATUS	REV	B	B	A	A	B	B	A	A																
OF SHEETS	SHEET	1	2	3	4	5	6	7	8																

ALL DIMENSIONS ARE IN INCHES UNLESS OTHERWISE SPECIFIED

TOLERANCES
3 PLACE DECIMALS ±.005
2 PLACE DECIMALS ±.02
1 PLACE DECIMAL ±.1

FRACTIONS ± ANGLES ±0°30'

MAX SURFACE ROUGHNESS 125 ALL MACHINED SURFACES EXCEPT AS NOTED

BREAK SHARP EDGES AND CORNERS .010 MAX

CONTRACT NO.

DWN	Sandra Arnold	10/14/77
ENGR		11-9-77
CHK	Cecilia Maher	11-9-77
PROD		
APVD		

SATELLITE COMMUNICATIONS DIVISION

Scientific-Atlanta, Inc.

3845 Pleasantdale Road, Atlanta, Georgia 30340

TEST PROCEDURE

IF AMPLIFIER--PART NUMBER 127183

SIZE	CODE IDENT NO.	DRAWING NO.
A	10110	132330

SCALE	REV	SHEET
	B	1 of 8

SA578-1076

1.0 SCOPE

The purpose of this test procedure is to accomplish the overall adjustment and testing of the wideband 70-MHz IF Amplifier, part number 127183.

2.0 TEST EQUIPMENT REQUIRED

The following equipment, or its equivalent, is required.

Quantity	Description	Manufacturer/Model No.
1	Microwave Link Analyzer	Hewlett-Packard/3701A, 3702A, 3703A
1	Signal Generator	Hewlett-Packard/608F
1	Power Meter (1-mW head)	General Microwave/454A
1	DVM	Data Precision/3500
1	Attenuator, 12 dB in 1-dB steps	Hewlett-Packard/355C
1	Attenuator, 120 dB in 10-dB steps	Hewlett-Packard/355D
1	75-Ohm Termination	
1	Test Fixture	Scientific-Atlanta/ST10082

2.1 Test Equipment Connection

Power connections can be made to the IF amplifier through a module extender from the receiver mainframe. The IF input and output connections are available in the mainframe test slot.

The IF amplifier is designed to meet CCIR internal standards, which include an IF frequency of 70 MHz, and has 75-ohms input and output impedance. Consequently, test equipment impedance should be 75 ohms, or suitable 50- to 75-ohm adapters should be used where appropriate with 50-ohm equipment. The Hewlett-Packard Models 3701A, 3702A, and 3703 Microwave Link Analyzer (MLA) meet the requirements for accurate and meaningful adjustment of the IF amplifier. Make careful consideration of sweep linearity, impedance, etc., when substituting test equipment.

Refer to the test-equipment technical manuals for operating and connection information.

2.2 Return Loss Measurement

a. Set up the MLA to measure return loss, with an output level of -10 dBm. Measure and optimize the return loss of the signal input, signal output, and monitor output. Use the following trimmers to optimize return loss.

Signal Input:	C2
Signal Output:	C28
Monitor Output:	C34

b. Record optimized return loss measurements on section 1 of the data sheet.

2.3 Amplifier Frequency Response

a. Set up the MLA to measure IF amplitude with 50- to 90-MHz sweep-limited signal and an amplitude sensitivity of 0.1 dB/division. Check the MLA back-to-back at a 10-dBm level to note deviations from a flat response.

b. Switch the amplifier to the manual gain (MGC) position. Connect the MLA output to pin A and the MLA IF input to pin B.

c. Adjust C9, C16, and C22 to midrange. Adjust these components for best flatness at input levels of -10, -20, -30, -40 and -50 dB. All capacitance should be approximately equal. The amplifier MANUAL GAIN CONTROL should be used to maintain a -10 dB output level to the MLA.

d. Connect the MLA IF input to pin C of the amplifier, and terminate pin B (75 ohms). Adjust C27 for best flatness over the same level ranges in step c above.

e. Measure and record signal output (pin A), and monitor output (pin C) flatness as required on section 2 of data sheet.

2.4 Amplifier Gain and AGC Adjustment

a. Connect test equipment as shown in Figure 1.

NOTE

During testing a 75-ohm termination must be placed at all times on unused signal or monitor output.

b. Adjust R59 for 5.0V dc at the cathode of CR10, and R63 for 5.0V dc at the cathode of CR11.

c. Set R58, R61, and R64 to the center of their adjustment range.

d. Set the amplifier AGC mode switch (S101) to the AGC position.

e. Set the attenuators for 20 dB of attenuation. Adjust R44 for a level of -5 dBm at the amplifier signal output (pin B).

f. Set the attenuators for 40 dB of attenuation. Adjust R55 for 0V dc on DVM. Slight readjustment of R58 may be necessary.

g. Set the attenuators for 30 dB of attenuation. Adjust R58 for 1V dc.

h. Because R55 and R58 interact, steps e and f should be repeated until both conditions are met (40-dB gain and 10-dB/volt AGC slope).

i. Adjust R59 until the AGC voltage exceeds 1V dc, then back off to the 1V dc level.

j. Set the attenuators for 20 dB of attenuation. Adjust R61 for 2V dc of AGC voltage.

k. Set the attenuators for 10 dB of attenuation. Adjust R63 for 3V dc of AGC voltage.

NOTE

If the adjustments in step j or k cannot be made, R59 should be readjusted.

l. Set the attenuators for 0 dB of attenuation. Adjust R64 for 4V dc of AGC voltage.

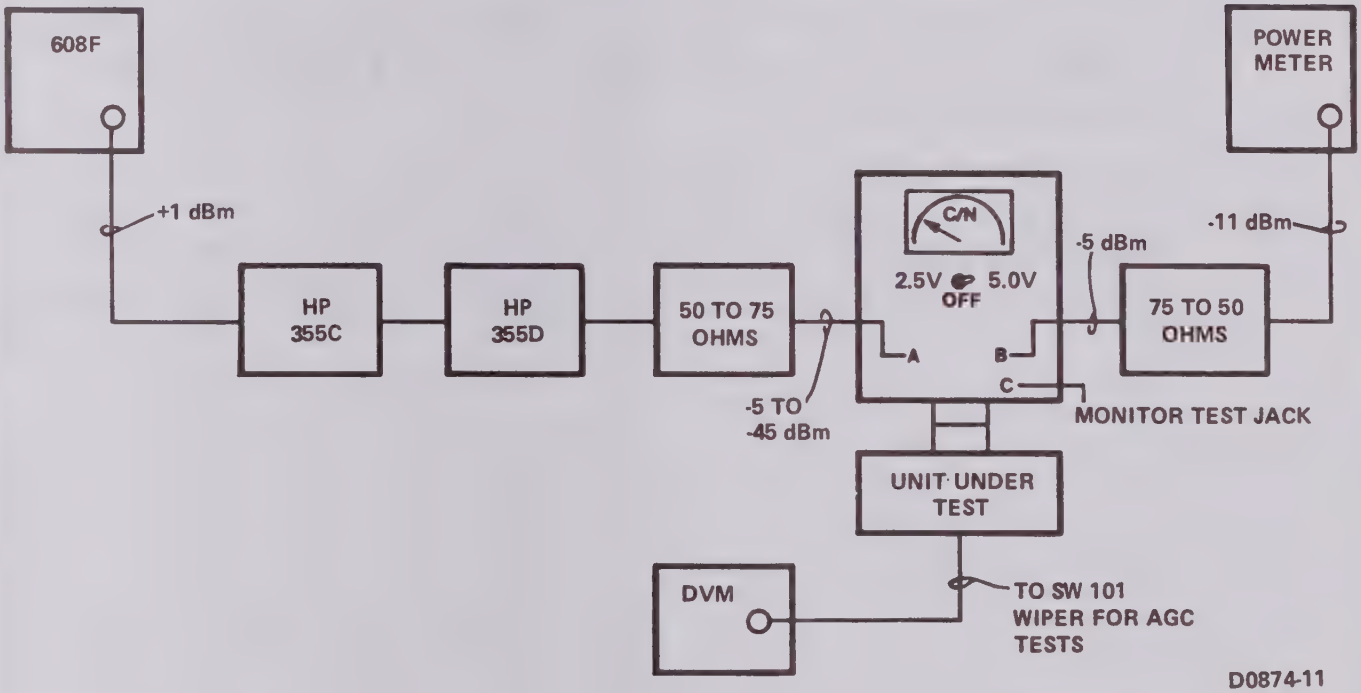

Figure 1. Amplifier Gain and AGC Adjustment Test Setup

SCIENTIFIC-ATLANTA, INC. SATELLITE COMMUNICATIONS DIVISION	SIZE A	CODE IDENT NO. 10110	DRAWING NO. 132330
	SCALE	REV B	SHEET 5

m. Because R63 and R64 interact, steps k and l should be repeated until both conditions are met.

n. Record AGC linearity in 2-dB steps as required in section 3 of the data sheet. Set the test fixture meter switch to the 5V full-scale position. Set the attenuator to 40 dB, and adjust ZERO ON NOISE control to give a 0V meter reading. As the linearity is checked, note that the C/N meter tracks from zero at the 40-dB attenuator setting to 4 volts at the 0-dB attenuator setting. If AGC linearity specifications cannot be met, steps h through m should be repeated. If the C/N meter does not track, check R101, R49 and U1 with its associated components.

o. Set the attenuators for 20 dB with the amplifier in the AGC mode. Measure and record on the data sheet the output level at pin B (signal output) and pin C (monitor output).

p. Switch the amplifier mode switch to the MGC position. Set the MANUAL GAIN control (R102) full counterwise. The attenuators should be adjusted for an output level of -5 dBm at pin B (signal out). The attenuation is equal to the amplifier gain. Record the attenuator setting on the data sheet.

Test Data Sheet
IF Amplifier

P/N 127183 S/N_____

Date_____ Technician_____

Approved_____

1.0 Return Loss Measurement, 50-90 MHz (paragraph 2.2)

	Measured R. L.	Required
Signal Input	_____dB	26 dB
Signal Output	_____dB	20 dB
Monitor Output	_____dB	20 dB

2.0 Frequency Response, 50-90 MHz (paragraph 2.3)

	Signal Output Flatness		Monitor Output Flatness	
Gain	Measured	Required	Measured	Required
0 dB	_____dB	±0.1 dB	_____dB	±0.3 dB
10 dB	_____dB	±0.1 dB	_____dB	±0.3 dB
20 dB	_____dB	±0.1 dB	_____dB	±0.3 dB
30 dB	_____dB	±0.2 dB	_____dB	±0.4 dB
40 dB	_____dB	±0.5 dB	_____dB	±0.7 dB

3.0 Amplifier Gain and AGC (paragraph 2.4)

Atten.	AGC Volts	Required Volts
40	_____	0 ±0.1
38	_____	0.2 ±0.1
36	_____	0.4 ±0.1
34	_____	0.6 ±0.1
32	_____	0.8 ±0.1
30	_____	1.0 ±0.1
28	_____	1.2 ±0.1

Atten.	AGC Volts	Required Volts
2(	_____	1.4 ±0.1
2A	_____	1.6 ±0.1
2(	_____	1.8 ±0.1
2(	_____	2.0 ±0.1
1(	_____	2.2 ±0.1
1(	_____	2.4 ±0.1
1(	_____	2.6 ±0.1
1(	_____	2.8 ±0.1
1(	_____	3.0 ±0.2
1	_____	3.2 ±0.2
1	_____	3.4 ±0.2
1	_____	3.6 ±0.2
1	_____	3.8 ±0.2
1	_____	4.0 ±0.2

Output Level Pin B _____ dB Required -5 dB ±1 dB

Output Level Pin C _____ dB Required -5 dB ±2 dB

	Measured	Required
Gain, MIC Inpu	_____ dB	40 dB ±2 dB

	SIZE	CODE IDENT NO.	DRAWING NO.
	A	10110	132330
	SCALE	REV A	SHEET 8

PARTS LIST

IF AMPLIFIER ASSEMBLY--DRAWING NO. 127183

ITEM	COMPONENT	DESCRIPTION	FSCM	MFR PART NUMBER
	0126830	IF AMPLIFIER SCHEMATIC DIAGRAM		
1	0126914	IF AMPLIFIER PW BOARD ASSEMBLY		
2	0127195	CHASSIS		
3	0090723	COVER,LOWER DECK MODULE SERIES 400		
4	0126784	PANEL,FRONT		
5	0090724	REAR PANEL,SINGLE WIDTH LWR DECK MODULE		
6	0078531	CONN RECT BODY W/O CONTACTS 20 POS PLUG	09922	MS20PM-61
7	0078532	CONN CONTACT MALE COAX CRIMP .1 D CABLE	09922	RCDXK-1
8	0078535	CONN CONTACT FEMALE CRIMP NO. 24 WIRE	09922	RC24M-9
9	0073835	CABLE COAX 75 OHM MIN 0.110 OD	07145	RG187/U
10	0079007	SCREW 4-40 X 1/8 F HD,100 DEG,SST		BY DESCRIPTION
11	0078988	SCREW 4-40 X 3/16 F HD,100 DEG,SST		PER MS24693-C1
12	0078985	SCREW 2-56 X 3/16 F HD,100 DEG,SST		BY DESCRIPTION
13	0057444	NUT CLAMPING 1/4-32 THD	10110	57444
14	0129988	SLEEVE 1/2 DIA SWITCH MTG USE WITH 57444		
15	0080605	WASHER 1/4 LOCK, INT TOOTH, NI PLT STL	01121	M4748
R101	0071707	POT 10K OHM 1/2W COMP PNL MT 1/2 RD LCKG	01121	RV6LAYSA103A
R102	0071707	POT 10K OHM 1/2W COMP PNL MT 1/2 RD LCKG	01121	RV6LAYSA103A
R103	0072026	RESISTOR 10K OHM 1/4W 10% COMP	01121	RCR07G103KS
S101	0082829	SWITCH ROT 2P 2 POS NSH 1 SEC 60 DEG	01686	SW 1891-1

PARTS LIST

ASSEMBLY 126914 IF AMPLIFIER PW BOARD ASSEMBLY

ITEM	COMPONENT	DESCRIPTION	MFR	FSCM	MFR PART NUMBER
	0126830	IF AMPLIFIER SCHEMATIC DIAGRAM			
1	0126913	IF AMPLIFIER PW BOARD			
2	0072879	STANDOFF 2-56 ID 1/8 HT SWAGE CD P BRSS	CTC	71279	350-2188-09-07-00
C1	0081210	CAPACITR .01 MF 50V CER MONO X7R 10%	ER	72982	8121-050-X7R-103K
C2	0079097	CAPACITR 3-15 PF MIN CER DISC PC MT	ER	72982	538-011 D 3-15
C3	0073486	CAPACITR 1 PF 500V CER TUBULAR	A	00656	CC20CK010C
C4	0081210	CAPACITR .01 MF 50V CER MONO X7R 10%	ER	72982	8121-050-X7R-103K
C5	0081210	CAPACITR .01 MF 50V CER MONO X7R 10%	ER	72982	8121-050-X7R-103K
C6	0081210	CAPACITR .01 MF 50V CER MONO X7R 10%	ER	72982	8121-050-X7R-103K
C7	0081210	CAPACITR .01 MF 50V CER MONO X7R 10%	ER	72982	8121-050-X7R-103K
C8	0081210	CAPACITR .01 MF 50V CER MONO X7R 10%	ER	72982	8121-050-X7R-103K
C9	0079171	CAPACITR 9-35 PF MIN CER DISC PC MT	ER	72982	538-011 D 9-35
C10	0073486	CAPACITR 1 PF 500V CER TUBULAR	A	00656	CC20CK010C
C11	0081210	CAPACITR .01 MF 50V CER MONO X7R 10%	ER	72982	8121-050-X7R-103K
C12	0081210	CAPACITR .01 MF 50V CER MONO X7R 10%	ER	72982	8121-050-X7R-103K
C13	0081210	CAPACITR .01 MF 50V CER MONO X7R 10%	ER	72982	8121-050-X7R-103K
C14	0081210	CAPACITR .01 MF 50V CER MONO X7R 10%	ER	72982	8121-050-X7R-103K
C15	0081210	CAPACITR .01 MF 50V CER MONO X7R 10%	ER	72982	8121-050-X7R-103K
C16	0079171	CAPACITR 9-35 PF MIN CER DISC PC MT	ER	72982	538-011 D 9-35
C17	0073486	CAPACITR 1 PF 500V CER TUBULAR	A	00656	CC20CK010C
C18	0081210	CAPACITR .01 MF 50V CER MONO X7R 10%	ER	72982	8121-050-X7R-103K
C19	0081210	CAPACITR .01 MF 50V CER MONO X7R 10%	ER	72982	8121-050-X7R-103K
C20	0081210	CAPACITR .01 MF 50V CER MONO X7R 10%	ER	72982	8121-050-X7R-103K
C21	0081210	CAPACITR .01 MF 50V CER MONO X7R 10%	ER	72982	8121-050-X7R-103K
C22	0079171	CAPACITR 9-35 PF MIN CER DISC PC MT	ER	72982	538-011 D 9-35
C23	0073486	CAPACITR 1 PF 500V CER TUBULAR	A	00656	CC20CK010C
C24	0081210	CAPACITR .01 MF 50V CER MONO X7R 10%	ER	72982	8121-050-X7R-103K
C25	0081210	CAPACITR .01 MF 50V CER MONO X7R 10%	ER	72982	8121-050-X7R-103K
C26	0081210	CAPACITR .01 MF 50V CER MONO X7R 10%	ER	72982	8121-050-X7R-103K
C27	0078976	CAPACITR 15-60 PF MIN CER DISC PC MT	ER	72982	538-011 F 15-60
C28	0079171	CAPACITR 9-35 PF MIN CER DISC PC MT	ER	72982	538-011 D 9-35
C29	0081210	CAPACITR .01 MF 50V CER MONO X7R 10%	ER	72982	8121-050-X7R-103K
C30	0081210	CAPACITR .01 MF 50V CER MONO X7R 10%	ER	72982	8121-050-X7R-103K
C31	0073486	CAPACITR 1 PF 500V CER TUBULAR	A	00656	CC20CK010C
C32	0081210	CAPACITR .01 MF 50V CER MONO X7R 10%	ER	72982	8121-050-X7R-103K
C33	0081210	CAPACITR .01 MF 50V CER MONO X7R 10%	ER	72982	8121-050-X7R-103K
C34	0079171	CAPACITR 9-35 PF MIN CER DISC PC MT	ER	72982	538-011 D 9-35
C35	0081210	CAPACITR .01 MF 50V CER MONO X7R 10%	ER	72982	8121-050-X7R-103K
C36	0081210	CAPACITR .01 MF 50V CER MONO X7R 10%	ER	72982	8121-050-X7R-103K
C37	0081210	CAPACITR .01 MF 50V CER MONO X7R 10%	ER	72982	8121-050-X7R-103K
C38	0070622	CAPACITR 3.9 MF 35V SOLID TANT POL 10%	SP	80183	CS13BF395K
C39	0081210	CAPACITR .01 MF 50V CER MONO X7R 10%	ER	72982	8121-050-X7R-103K
C40	0081210	CAPACITR .01 MF 50V CER MONO X7R 10%	ER	72982	8121-050-X7R-103K
C41	0080139	CAPACITR .1 MF 50V CER MONO -20%+80%	ER	72982	8131-050-651-104Z
C42	0080139	CAPACITR .1 MF 50V CER MONO -20%+80%	ER	72982	8131-050-651-104Z

ASSEMBLY 126914 IF AMPLIFIER PW BOARD ASSEMBLY - continued

ITEM	COMPONENT	DESCRIPTION	MFR	FSCM	MFR PART NUMBER
C43	0080139	CAPACITR .1 MF 50V CER MONO -20%+80%	ER	72982	8131-050-651-104Z
C44	0081210	CAPACITR .01 MF 50V CER MONO X7R 10%	ER	72982	8121-050-X7R-103K
C45	0081210	CAPACITR .01 MF 50V CER MONO X7R 10%	ER	72982	8121-050-X7R-103K
C46	0081210	CAPACITR .01 MF 50V CER MONO X7R 10%	ER	72982	8121-050-X7R-103K
C47	0080139	CAPACITR .1 MF 50V CER MONO -20%+80%	ER	72982	8131-050-651-104Z
C48	0080139	CAPACITR .1 MF 50V CER MONO -20%+80%	ER	72982	8131-050-651-104Z
C49	0080139	CAPACITR .1 MF 50V CER MONO -20%+80%	ER	72982	8131-050-651-104Z
C50	0080139	CAPACITR .1 MF 50V CER MONO -20%+80%	ER	72982	8131-050-651-104Z
C51	0070622	CAPACITR 3.9 MF 35V SOLID TANT POL 10%	SP	80183	CS13BF395K
C52	0070622	CAPACITR 3.9 MF 35V SOLID TANT POL 10%	SP	80183	CS13BF395K
C53	0081210	CAPACITR .01 MF 50V CER MONO X7R 10%	ER	72982	8121-050-X7R-103K
CR1	0147396	RESISTOR CURRENT CONT HF/UHF	XZ		PER S-A SPEC. 147396
CR2	0147396	RESISTOR CURRENT CONT HF/UHF	XZ		PER S-A SPEC. 147396
CR3	0147396	RESISTOR CURRENT CONT HF/UHF	XZ		PER S-A SPEC. 147396
CR4	0147396	RESISTOR CURRENT CONT HF/UHF	XZ		PER S-A SPEC. 147396
CR5	0147396	RESISTOR CURRENT CONT HF/UHF	XZ		PER S-A SPEC. 147396
CR6	0147396	RESISTOR CURRENT CONT HF/UHF	XZ		PER S-A SPEC. 147396
CR7	0071142	DIODE 1N4154 SIL 25V 150MA	SY	80368	1N4154
CR8	0071142	DIODE 1N4154 SIL 25V 150MA	SY	80368	1N4154
CR9	0071142	DIODE 1N4154 SIL 25V 150MA	SY	80368	1N4154
CR10	0071142	DIODE 1N4154 SIL 25V 150MA	SY	80368	1N4154
CR11	0071142	DIODE 1N4154 SIL 25V 150MA	SY	80368	1N4154
L1	0081766	CORE BEAD FERRITE 14 .138X.037X.150L RED	STK	78488	57-1829
L2	0081766	CORE BEAD FERRITE 14 .138X.037X.150L RED	STK	78488	57-1829
L3	0081766	CORE BEAD FERRITE 14 .138X.037X.150L RED	STK	78488	57-1829
L4	0081766	CORE BEAD FERRITE 14 .138X.037X.150L RED	STK	78488	57-1829
L5	0081766	CORE BEAD FERRITE 14 .138X.037X.150L RED	STK	78488	57-1829
L6	0081766	CORE BEAD FERRITE 14 .138X.037X.150L RED	STK	78488	57-1829
L7	0081766	CORE BEAD FERRITE 14 .138X.037X.150L RED	STK	78488	57-1829
L8	0081766	CORE BEAD FERRITE 14 .138X.037X.150L RED	STK	78488	57-1829
L9	0081766	CORE BEAD FERRITE 14 .138X.037X.150L RED	STK	78488	57-1829
Q1	0035669	TRANSSTR 2N5179 SIL NPN	MOS	04713	2N5179
Q2	0035669	TRANSSTR 2N5179 SIL NPN	MOS	04713	2N5179
Q3	0035669	TRANSSTR 2N5179 SIL NPN	MOS	04713	2N5179
Q4	0035669	TRANSSTR 2N5179 SIL NPN	MOS	04713	2N5179
Q5	0035669	TRANSSTR 2N5179 SIL NPN	MOS	04713	2N5179
Q6	0035669	TRANSSTR 2N5179 SIL NPN	MOS	04713	2N5179
Q7	0035669	TRANSSTR 2N5179 SIL NPN	MOS	04713	2N5179
Q8	0035669	TRANSSTR 2N5179 SIL NPN	MOS	04713	2N5179
Q9	0035669	TRANSSTR 2N5179 SIL NPN	MOS	04713	2N5179
Q10	0035669	TRANSSTR 2N5179 SIL NPN	MOS	04713	2N5179
Q11	0035669	TRANSSTR 2N5179 SIL NPN	MOS	04713	2N5179
Q12	0078850	TRANSSTR 2N2219 NPN SIL	FSC	13715	2N2219
Q13	0077147	TRANSSTR 2N3947 NPN SIL	MOS	04713	2N3947
Q14	0077147	TRANSSTR 2N3947 NPN SIL	MOS	04713	2N3947

ASSEMBLY 126914 IF AMPLIFIER PW BOARD ASSEMBLY - continued

ITEM	COMPONENT	DESCRIPTION	MFR	FSCM	MFR PART NUMBER
R1	0071857	RESISTOR 33 OHM 1/4W 10% COMP	AB	01121	RCR07G330KS
R2	0078938	RESISTOR 68 OHM 1/4W 5% COMP	AB	01121	RCR07G680JS
R3	0071926	RESISTOR 470 OHM 1/4W 10% COMP	AB	01121	RCR07G471KS
R4	0071913	RESISTOR 270 OHM 1/4W 10% COMP	AB	01121	RCR07G271KS
R5	0071951	RESISTOR 1.0K OHM 1/4W 10% COMP	AB	01121	RCR07G102KS
R6	0071960	RESISTOR 1.2K OHM 1/4W 10% COMP	AB	01121	RCR07G122KS
R7	0071951	RESISTOR 1.0K OHM 1/4W 10% COMP	AB	01121	RCR07G102KS
R8	0071853	RESISTOR 27 OHM 1/4W 10% COMP	AB	01121	RCR07G270KS
R9	0071853	RESISTOR 27 OHM 1/4W 10% COMP	AB	01121	RCR07G270KS
R10	0071951	RESISTOR 1.0K OHM 1/4W 10% COMP	AB	01121	RCR07G102KS
R11	0071960	RESISTOR 1.2K OHM 1/4W 10% COMP	AB	01121	RCR07G122KS
R12	0071951	RESISTOR 1.0K OHM 1/4W 10% COMP	AB	01121	RCR07G102KS
R13	0071853	RESISTOR 27 OHM 1/4W 10% COMP	AB	01121	RCR07G270KS
R14	0071853	RESISTOR 27 OHM 1/4W 10% COMP	AB	01121	RCR07G270KS
R15	0071926	RESISTOR 470 OHM 1/4W 10% COMP	AB	01121	RCR07G471KS
R16	0071913	RESISTOR 270 OHM 1/4W 10% COMP	AB	01121	RCR07G271KS
R17	0071951	RESISTOR 1.0K OHM 1/4W 10% COMP	AB	01121	RCR07G102KS
R18	0071960	RESISTOR 1.2K OHM 1/4W 10% COMP	AB	01121	RCR07G122KS
R19	0071951	RESISTOR 1.0K OHM 1/4W 10% COMP	AB	01121	RCR07G102KS
R20	0071853	RESISTOR 27 OHM 1/4W 10% COMP	AB	01121	RCR07G270KS
R21	0071853	RESISTOR 27 OHM 1/4W 10% COMP	AB	01121	RCR07G270KS
R22	0071926	RESISTOR 470 OHM 1/4W 10% COMP	AB	01121	RCR07G471KS
R23	0071853	RESISTOR 27 OHM 1/4W 10% COMP	AB	01121	RCR07G270KS
R24	0071913	RESISTOR 270 OHM 1/4W 10% COMP	AB	01121	RCR07G271KS
R25	0071951	RESISTOR 1.0K OHM 1/4W 10% COMP	AB	01121	RCR07G102KS
R26	0071960	RESISTOR 1.2K OHM 1/4W 10% COMP	AB	01121	RCR07G122KS
R27	0079895	RESISTOR 75.0 OHM RN60C 1% MTL FLM	DP		RN60C75R0F
R28	0075587	RESISTOR 51 OHM 1/4W 5% COMP	AB	01121	RCR07G510JS
R29	0075587	RESISTOR 51 OHM 1/4W 5% COMP	AB	01121	RCR07G510JS
R30	0071918	RESISTOR 330 OHM 1/4W 10% COMP	AB	01121	RCR07G331KS
R31	0071897	RESISTOR 150 OHM 1/4W 10% COMP	AB	01121	RCR07G151KS
R32	0071951	RESISTOR 1.0K OHM 1/4W 10% COMP	AB	01121	RCR07G102KS
R33	0071960	RESISTOR 1.2K OHM 1/4W 10% COMP	AB	01121	RCR07G122KS
R34	0079895	RESISTOR 75.0 OHM RN60C 1% MTL FLM	DP		RN60C75R0F
R35	0072002	RESISTOR 4.7K OHM 1/4W 10% COMP	AB	01121	RCR07G472KS
R36	0072039	RESISTOR 15K OHM 1/4W 10% COMP	AB	01121	RCR07G153KS
R37	0071907	RESISTOR 220 OHM 1/4W 10% COMP	AB	01121	RCR07G221KS
R38	0076275	RESISTOR 22 OHM 1/4W 10% COMP	AB	01121	RCR07G220KS
R39	0071973	RESISTOR 1.8K OHM 1/4W 10% COMP	AB	01121	RCR07G182KS
R40	0071907	RESISTOR 220 OHM 1/4W 10% COMP	AB	01121	RCR07G221KS
R41	0071977	RESISTOR 2.2K OHM 1/4W 10% COMP	AB	01121	RCR07G222KS
R42	0071977	RESISTOR 2.2K OHM 1/4W 10% COMP	AB	01121	RCR07G222KS
R43	0072138	RESISTOR 220K OHM 1/4W 10% COMP	AB	01121	RCR07G224KS
R44	0078723	POT 10K OHM 1/2W CER 3/8 DIA VERT ADJ	AB	01121	SV1031

PARTS LIST

ASSEMBLY 126914 IF AMPLIFIER PW BOARD ASSEMBLY - continued

ITEM	COMPONENT	DESCRIPTION	MFR	FSCM	MFR PART NUMBER
R46	0078246	RESISTOR 10.0K OHM RN60C 1% MTL FLM	DP		RN60C1002F
R47	0072077	RESISTOR 47K OHM 1/4W 10% COMP	AB	01121	RCR07G473KS
R48	0078246	RESISTOR 10.0K OHM RN60C 1% MTL FLM	DP		RN60C1002F
R49	0078910	RESISTOR 11.5K OHM RN60C 1% MTL FLM	DP		RN60C1152F
R50	0071951	RESISTOR 1.0K OHM 1/4W 10% COMP	AB	01121	RCR07G102KS
R51	0072026	RESISTOR 10K OHM 1/4W 10% COMP	AB	01121	RCR07G103KS
R52	0072026	RESISTOR 10K OHM 1/4W 10% COMP	AB	01121	RCR07G103KS
R53	0071887	RESISTOR 100 OHM 1/4W 10% COMP	AB	01121	RCR07G101KS
R54	0072113	RESISTOR 100K OHM 1/4W 10% COMP	AB	01121	RCR07G104KS
R55	0078723	POT 10K OHM 1/2W CER 3/8 DIA VERT ADJ	AB	01121	SV1031
R56	0072002	RESISTOR 4.7K OHM 1/4W 10% COMP	AB	01121	RCR07G472KS
R57	0072054	RESISTOR 22K OHM 1/4W 10% COMP	AB	01121	RCR07G223KS
R58	0078768	POT 50K OHM 1/2W CER 3/8 DIA VERT ADJ	AB	01121	SV5031
R59	0078723	POT 10K OHM 1/2W CER 3/8 DIA VERT ADJ	AB	01121	SV1031
R60	0072113	RESISTOR 100K OHM 1/4W 10% COMP	AB	01121	RCR07G104KS
R61	0078768	POT 50K OHM 1/2W CER 3/8 DIA VERT ADJ	AB	01121	SV5031
R62	0072113	RESISTOR 100K OHM 1/4W 10% COMP	AB	01121	RCR07G104KS
R63	0078723	POT 10K OHM 1/2W CER 3/8 DIA VERT ADJ	AB	01121	SV1031
R64	0078768	POT 50K OHM 1/2W CER 3/8 DIA VERT ADJ	AB	01121	SV5031
R65	0076282	RESISTOR 4.7 OHM 1/4W 10% COMP	AB	01121	RCR07G4R7KS
R66	0076282	RESISTOR 4.7 OHM 1/4W 10% COMP	AB	01121	RCR07G4R7KS
R67	0078600	NOT ASSIGNED			
R69	0071887	RESISTOR 100 OHM 1/4W 10% COMP	AB	01121	RCR07G101KS
R70	0072026	RESISTOR 10K OHM 1/4W 10% COMP	AB	01121	RCR07G103KS
R71	0071926	RESISTOR 470 OHM 1/4W 10% COMP	AB	01121	RCR07G471KS
R72	0071913	RESISTOR 270 OHM 1/4W 10% COMP	AB	01121	RCR07G271KS
R73	0071913	RESISTOR 270 OHM 1/4W 10% COMP	AB	01121	RCR07G271KS
R74	0071887	RESISTOR 100 OHM 1/4W 10% COMP	AB	01121	RCR07G101KS
U1	0081840	IC OP AMP 8L-DIP 70C COMP DUAL 741C	NSC	79089	LM1458N
U2	0078977	IC OP AMP 8L-TO5 70C COMP 741C	MOS	04713	MC1741CG

MANUFACTURER'S CODES

FSCM	Manufacturer
00656	Aerovox Corporation New Bedford, Massachusetts
1121	Allen-Bradley Company Milwaukee, Wisconsin
01686	RCL Electronics, Inc. Manchester, New Hampshire
04713	Motorolo Semiconductors Milwaukee, Wisconsin
07145	Times Wire and Cable Co Wallingford, Connecticutt
09922	Burndy Corporation Norwalk, Connecticut
10110	Scientific-Atlanta, Inc. Altanta, Georgia
12969	Unitrode Corporation Watertown, Massachusetts
13715	Fairchild Semiconductor San Rafael, California
71279	Cambridge Thermionic Corp. Cambridge, Massachusetts
72982	Erie Resistor Corporation Erie, Pennsylvania
78488	Stackpole Carbon Company St. Marys, Pennsylvania
80183	Sprague Pdts., Company N. Adams, Massachusetts
80211	Motorolo Inc. Chicago, Illinois
80368	Sylvania Electric Pdts. Inc. New York, New York

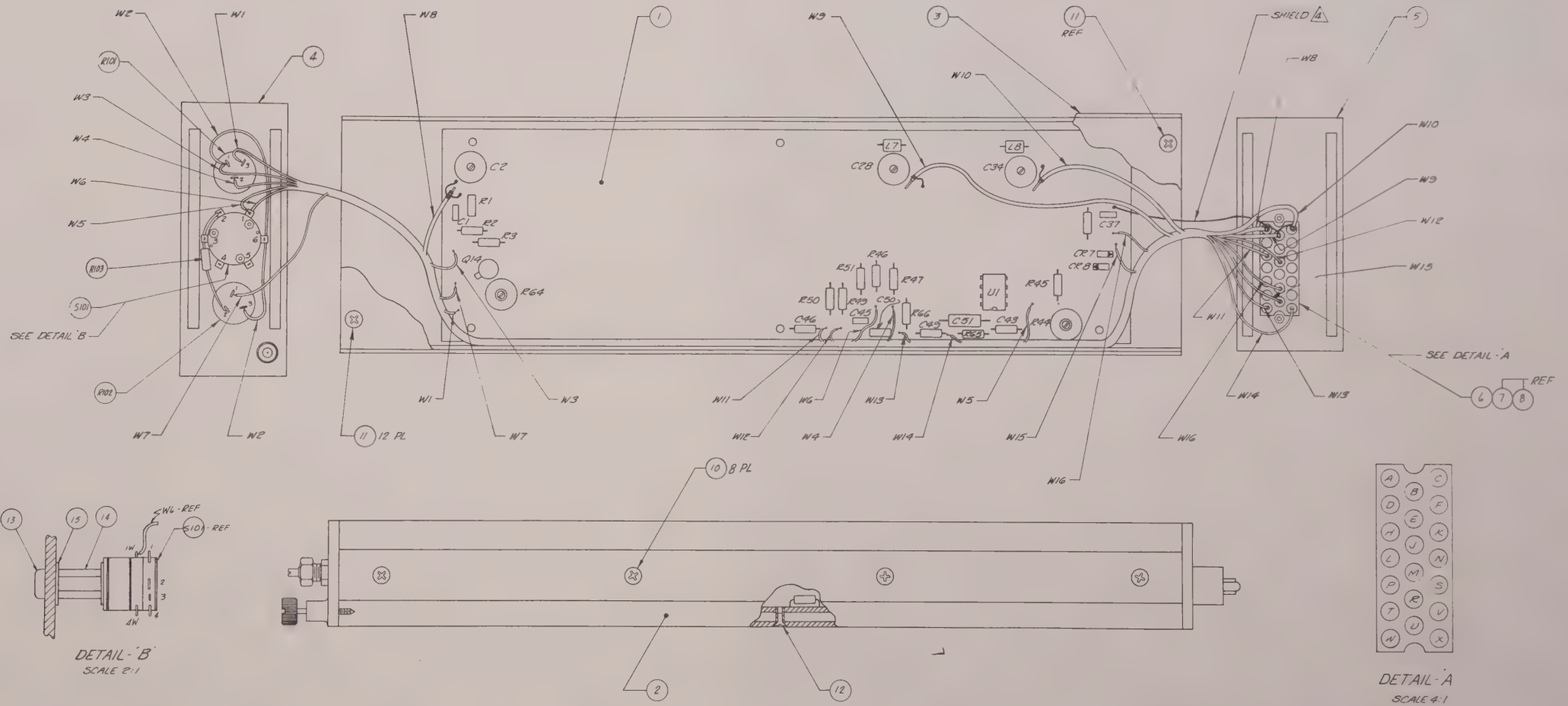

NOTES:

1. KEY TO FRONT PANEL POTS:

2. PIN 3 MANUAL GAIN POT CONNECTED TO GND.
3. PIN 1 ZERO ON NOISE POT CONNECTED TO GND.
4. THE COAX CABLES FROM PINS A, B AND C MUST HAVE THE SHIELD EXPOSED AND CONNECTED TO THE BOARD GROUND PLANE BY A PIECE OF BUSS WIRE AT THE CONNECTOR END ALSO.
5. ALL COAX CABLES ARE RG187A/U. (9)
6. INSTALL S101 SO THE SLOT LINES UP WITH MARKS ON FRONT PANEL WHEN SWITCHED.

WIRE RUN LIST

WIRE	FROM	TO	COLOR	TYPE	LENGTH	TERM
W1	P101 PIN 3	BD	WHT/VIO	#24 STRANDED	AR	—
W2	P101 PIN 1	P102 PIN 3	BLACK	↑	↑	—
W3	P101 PIN 2	BD	BLACK			—
W4	P101 PIN 2	↑	WHITE			—
W5	S101 PIN 1		WHITE			—
W6	S101 PIN 1W		WHITE	↓		—
W7	P102 PIN 1		WHT/RED	#24 STRANDED		—
W8	J1-A		WHITE	RG 187		7
W9	J1-B		WHITE	RG 187		7
W10	J1-C		WHITE	RG 187		7
W11	J1-H		GREEN	#24 STRANDED		8
W12	J1-J		WHT/BLUE	↑		8
W13	J1-W		WHT/RED			8
W14	J1-X		WHT/VIO			8
W15	J1-U	↓	BLACK	↓	↓	8
W16	J1-R	BD	VIOLET	#24 STRANDED	AR	8

Figure 13-3. IF Amplifier Assembly

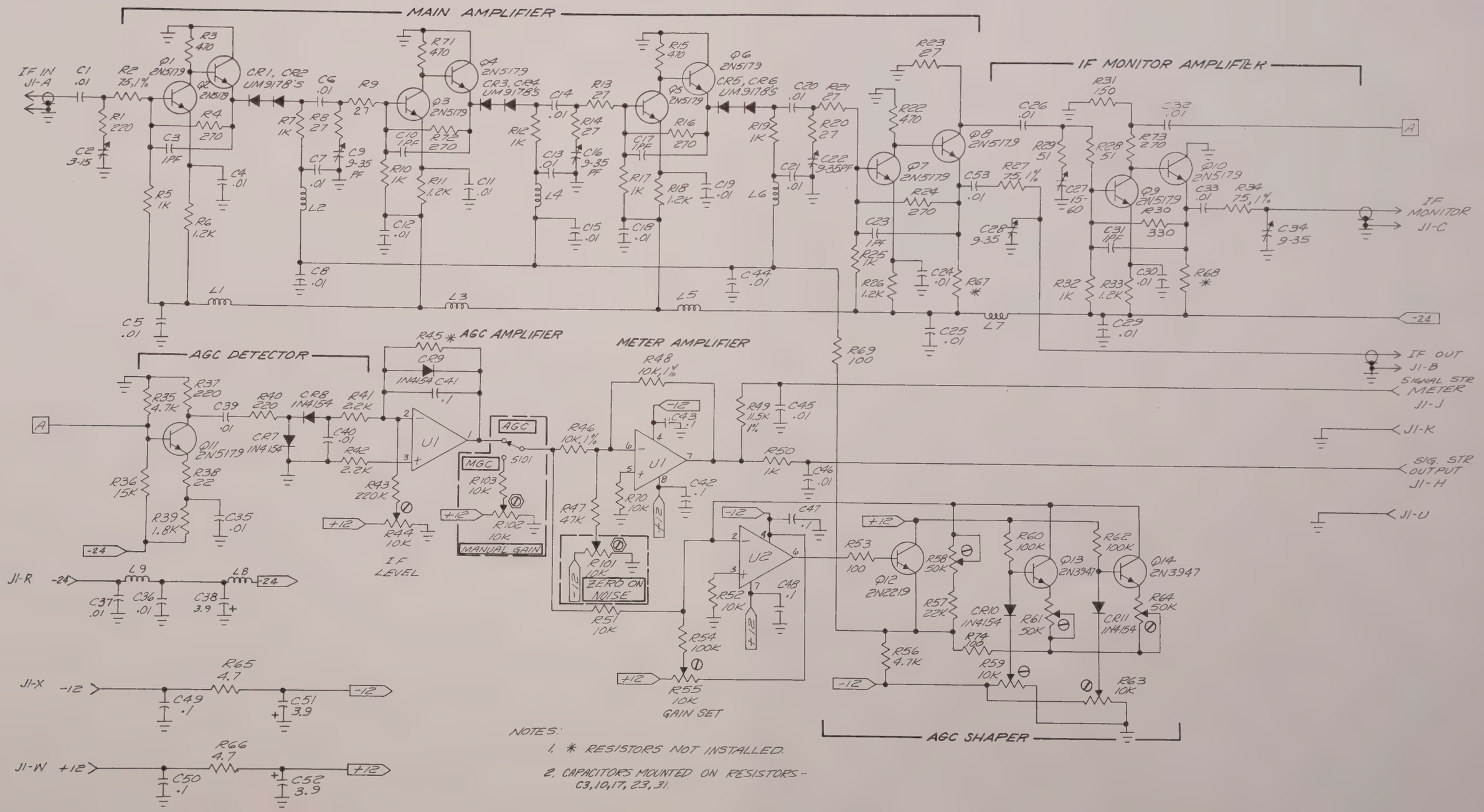

126830

Figure 13-4. IF Amplifier Wide-band 70-MHz Schematic Diagram

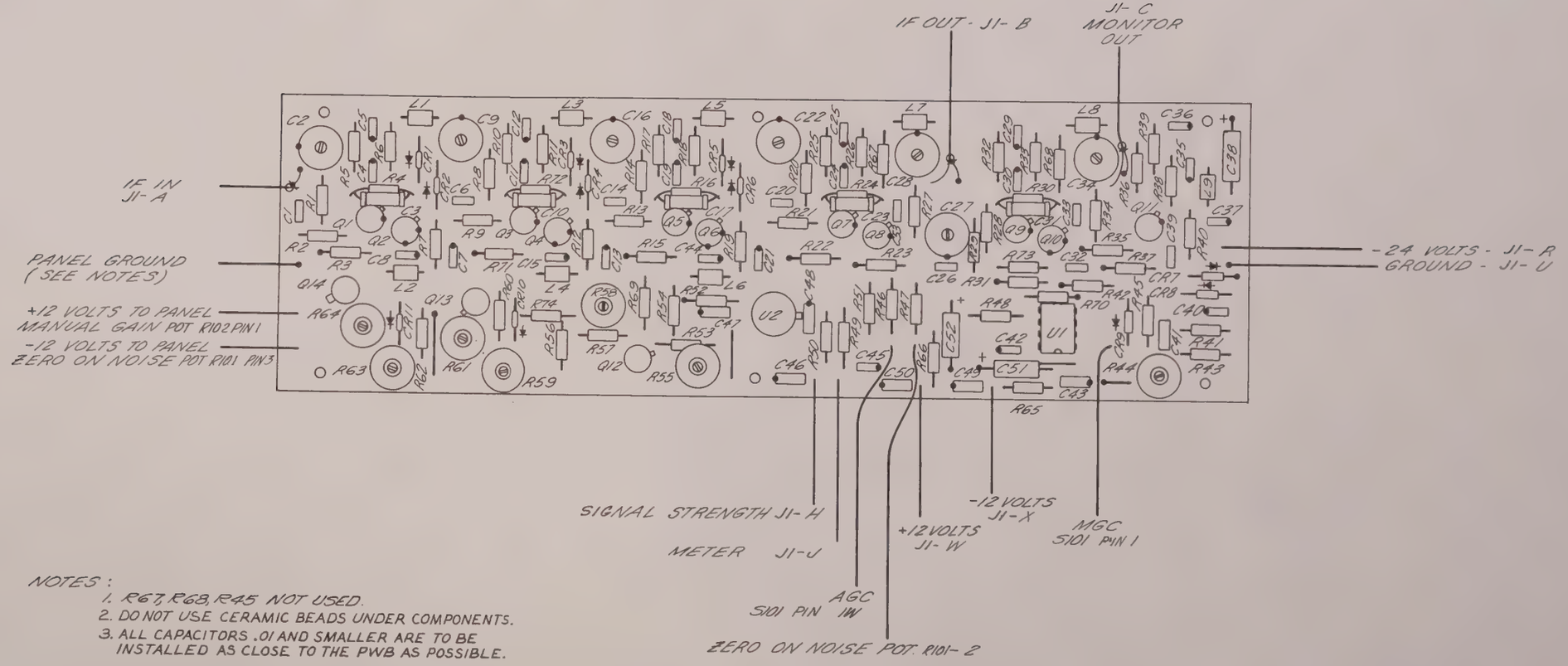

NOTES :

1. R67, R68, R45 NOT USED.
2. DO NOT USE CERAMIC BEADS UNDER COMPONENTS.
3. ALL CAPACITORS .01 AND SMALLER ARE TO BE INSTALLED AS CLOSE TO THE PWB AS POSSIBLE.

Figure 13-5. IF Amplifier Printed Wiring Board Assembly

IMPORTANT NOTE

The information behind this tabbed divider may apply to more than one item. Check all pages carefully.

33R060Z

IMPORTANT NOTE

The information behind this tabbed divider may apply to more than one item. Check all pages carefully.

33R0602

SECTION 20

NARROWBAND FM DEMODULATOR---PART NO. 209411

20.1 DESCRIPTION

The narrowband FM demodulator (figure 20-1) is a plug-in module intended for operation with Scientific-Atlanta Series 411 Receiver equipment. The demodulator provides discrimination of narrowband frequency-modulated signals, and is specifically designed for use in satellite communications for message (12 to 432 channels) reception.

P8327
55R302Z

Figure 20-1. Narrowband FM Demodulator
(Part Number 209411)

20.1.1 Technical Characteristics

Characteristic	Specification
Type	FM
IF Center Frequency	70 MHz
Input Impedance	75 ohms
Input Return Loss (70 ±10 MHz)	Greater than 26 dB
IF Limiting	15 dB, minimum
IF Input Level	-5 dBm ±2 dB
Discriminator Linearity (70 ±10 MHz)	Better than 1 percent
Output Level	
Message	-25 dBm at test tone (TT) deviations
Video	1.0V p-p at TT frequency
Frequency Response	±0.1 dB (5 Hz to 6 MHz) ±0.2 dB (6 MHz to 8.2 MHz)

20.1.2 Construction

All components are mounted on one circuit board attached to the left side cover of the module. Operating controls are on the front panel and the interface connector is on the rear of the module.

20.1.3 Circuit Description

The purpose of the narrowband demodulator is to recover narrowband FM information and provide a multiplexed baseband signal at a -25 dBm level at the test tone frequency for 12 to 432 channel message formats.

Figure 20-2 is a block diagram of the demoudlator.

The demodulator accepts a 70 ±10 MHz IF signal at a -5 dBm level and goes through an input amplifier, delay equalizer, and a driver amplifier before going through the limiter. The limiter consists of two diodes CR7 and CR8 which restrict the level into U1 to 0.8V p-p.

After being limited the signal goes through a 5 pole lowpass filter, an emitter-follower buffer stage, and a linearity network consisting of R101, L5, C41 and C42.

The feedback pair amplifier consisting of Q6 and Q7, provides additional gain, and splits the signal for injection into the pole driver amplifiers Q8 and Q10. The pole drivers are common emitter amplifiers with emitter degeneration. Resistor R54 controls the gain of the low frequency pole driver and is used to set the crossover freqency at the discriminator. Potentiometer R57 adjusts the Q and C56 the frequency of the low frequency pole while R46 adjusts the Q and C48 the frequency of the high frequency pole.

After detection by CR2 and CR3 the discriminator output is summed at the output of emitter-followers Q9 and Q11. The discriminated output increases with increase frequency.

The baseband output out of the first baseband amplifier (Q12 and Q15) is setup for 0.5V/10 MHz sensitivity into 75 ohms and is available at pin D for use primarily with Scientific-Atlanta's threshold extension unit.

Front-panel potentionmeter R201 controls the final level out of the demodulator. Q20 is a peak detector which can be used to determine approximate video output levels as noted on the mainframe multifunction meter. The peak detector does not respond to message signals.

20.1.4 Controls and Indicators

Control/Indicator	Function
BB Level	Locking potentionmeter sets the baseband level out of the demodulator. The output is set to -25 dBm at the test tone frequencies for message.

20.2 MAINTENANCE

Use a module extender to operate the narrowband demodulator from its normal position in the mainframe during maintenance and adjustment.

It is not anticipated that any field adjustment will be required except in the event of failure of certain components. Should component replacement make realignment necessary, it is recommended that only adjustment associated with the affected circuit be made. The following procedures are presented to permit alignment and level settings.

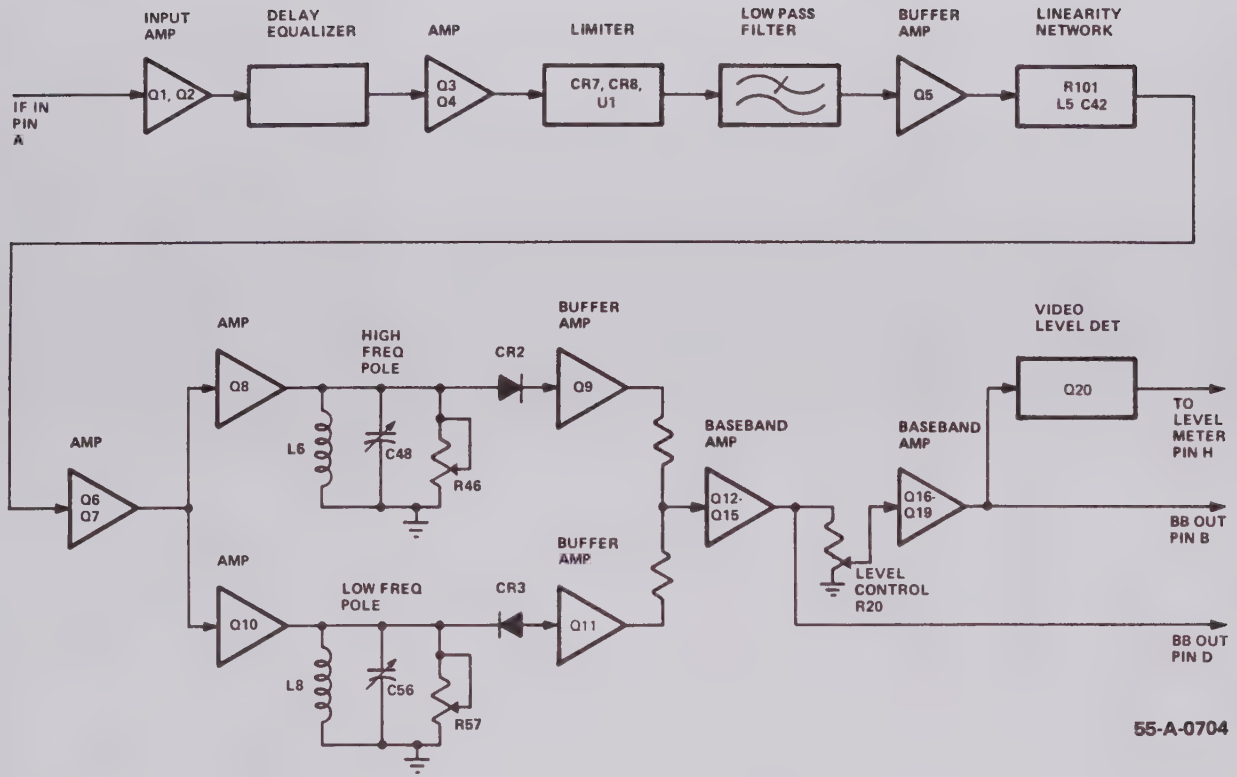

Figure 20-2. Narrowband FM Demodulator Block Diagram

20.2.1 Access to Circuit Boards

a. Remove the eight screws from the top and bottom edges of the module.

b. Remove the six screws from the ends of the right cover (facing the front panel).

c. Pull off the right cover.

20.2.2 Alignment and Performance Testing

Scientific-Atlanta Test Procedure No. 201249 is reproduced on the following pages. It can be used to verify that the narrowband demodulator is operating properly. No adjustments should be required during normal operation.

APPLICATION		REVISIONS			
NEXT ASSY	USED ON	SYM	DESCRIPTION	DATE	APPROVED
209411	411				

REV																								
SHEET																								
REV STATUS	REV																							
OF SHEETS	SHEET	1	2	3	4	5	6	7	8	9	10	11	12	13	14	15	16	17						

ALL DIMENSIONS ARE IN INCHES UNLESS OTHERWISE SPECIFIED

TOLERANCES
3 PLACE DECIMALS ± .005
2 PLACE DECIMALS ± .02
1 PLACE DECIMAL ± .1

FRACTIONS ± ANGLES ± 0°30'

MAX SURFACE ROUGHNESS 125 ALL MACHINED SURFACES EXCEPT AS NOTED

BREAK SHARP EDGES AND CORNERS .010 MAX

CONTRACT NO

DWN [signature] 7/1/80

ENGR [signature] 7-1-80

CHK [signature] 7-1-80

PROD

APVD R. Trapp 7-1-80

SATELLITE COMMUNICATIONS DIVISION

Scientific-Atlanta, Inc.

3845 Pleasantdale Road, Atlanta, Georgia 30340

Test Procedure

Narrow-band Demodulator

SIZE	CODE IDENT NO.	DRAWING NO
A	10110	201249

SCALE	REV	SHEET
		1 of 17

1.0 GENERAL

The purpose of this test is to align and performance test the narrowband demodulator part number 209411.

2.0 TEST EQUIPMENT REQUIRED

The following test equipment, or equivalent, is required to conduct the demodulator tests:

Quantity	Description	Mfg./Model No.
1	Microwave Link Analyzer	H/P3701A, 3702A, 3703A
1	Sweep Generator	Wavetek/1002
1	Oscilloscope	HP/1200A, 1200B
1	Accessory Power Supply	Tektronix/1101
1	FET Probe	Tektronix/P6201
1	Crystal Detector	WE/1112
1	70 MHz IF Measuring Instrument	W&G/ZFM-70
1	0.1 dB Step Attenuator	Texscan/RA-73
1	1.0 dB Step Attenuator	Texscan/RA-70
1	Noise Generator	Marconi/TF2091
1	Noise Receiver	Marconi/TF2092
1	Sweep Display Unit	W&G/SG-2
1	Receiver-Generator	W&G/AT444
1	Pre-Emphasis Network	Scientific-Atlanta
1	De-Emphasis Network	Scientific-Atlanta

3.0 ALIGNMENT AND TEST PROCEDURE

3.1 Input Return Loss

a. Set up equipment as shown in figure 1.

b. Set the microwave link analyzer for the return loss measurement at -5 dBm IF level.

c. Adjust C1 for best return loss from 60 to 80 MHz. Record.

SIZE	CODE IDENT NO.	DRAWING NO
A	10110	201249
SCALE	REV	SHEET 2

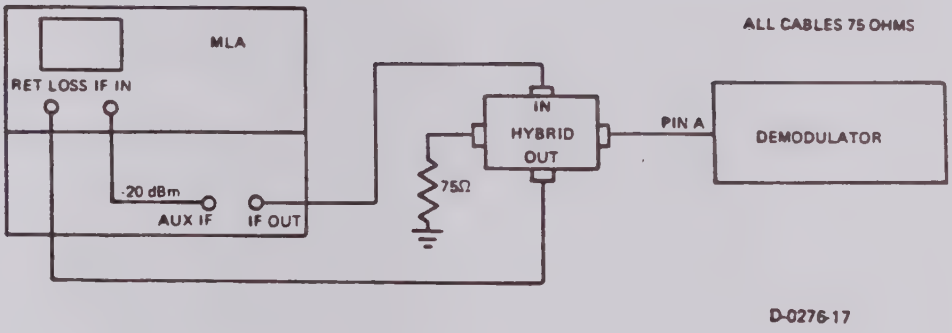

Figure 1. Input Return Loss Setup

	SIZE	CODE IDENT NO.	DRAWING NO.
	A	10110	201249
	SCALE	REV	SHEET 3

3.2 Balance

a. Set up the equipment as shown in figure 2. With no input to the demodulator connect the sweeper demodulator input to pin D, set the scope sensitivity to 50 mV/cm, and select a ground reference.

b. Adjust R63 to the selected ground reference.

c. Connect the sweeper demodulator input to pin B and set the demodulator BB level potentiometer to maximum.

d. Adjust R81 to the selected ground reference.

3.3 Discriminator Linearity and IF to BB Group Delay

a. With the equipment set up as on the last step, an RF level of -5 dBm at 70 MHz, set the BB level potentiometer of the demodulator to midrange and adjust all three poles (C56, R57, R54, R46, C48, C43, C42, R101, and L5) to the positions shown in figure 3. Slightly adjust these controls to achieve a waveform such as that shown in figure 4. The low pole must peak between 50 and 53 MHz and the high pole between 96 and 100 MHz.

b. Reduce the RF level out of the sweeper by 20 dB and note proper limiting by observing no noticeable change in the "S" curve. Check the data sheet.

c. Set the equipment as shown in figure 5. Set the MLA to measure demodulator IF to baseband linearity and group delay. The IF level into the demodulator is -5 dBm. Set the BB power attenuator on the 3702 to 30 dB. Adjust the demodulator BB LEVEL control to zero the BB level meter on the 3702. Set the sweep width of the MLA to display 70 ±10 MHz and calibrate the baseband display for 10%/div linearity and 1 ns/div group delay.

	SIZE	CODE IDENT NO.	DRAWING NO
	A	10110	201249
	SCALE	REV	SHEET 4

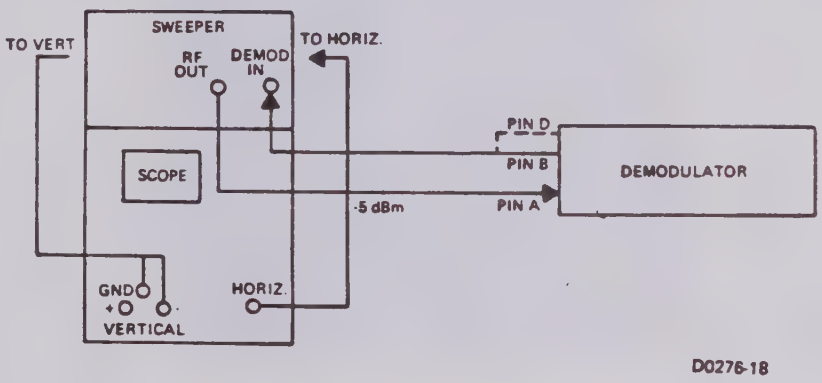

Figure 2. "S" Curve Test Setup

	SIZE	CODE IDENT NO.	DRAWING NO
	A	10110	201249
	SCALE	REV	SHEET 5

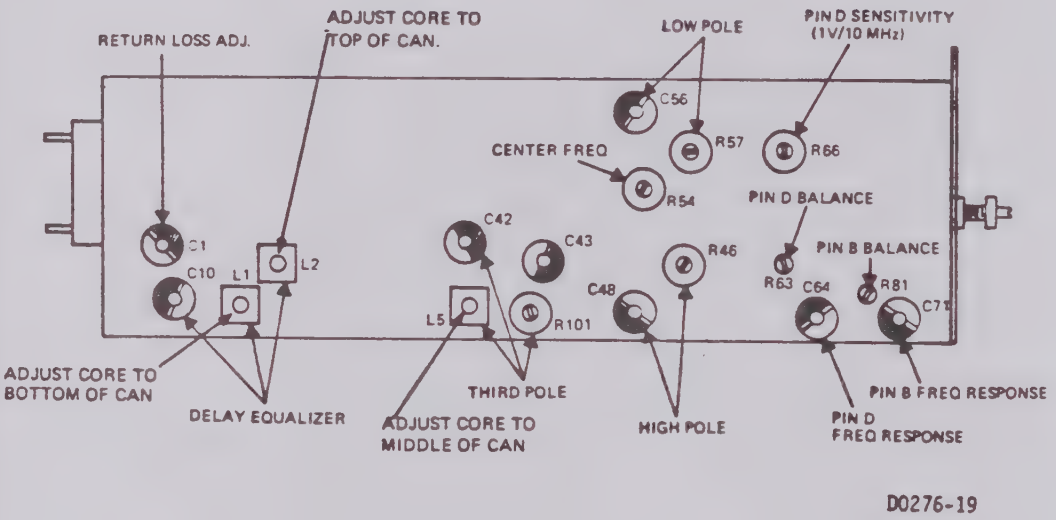

Figure 3. Initial Settings of Variable Components

SIZE	CODE IDENT NO.	DRAWING NO
A	10110	201249
SCALE	REV	SHEET 6

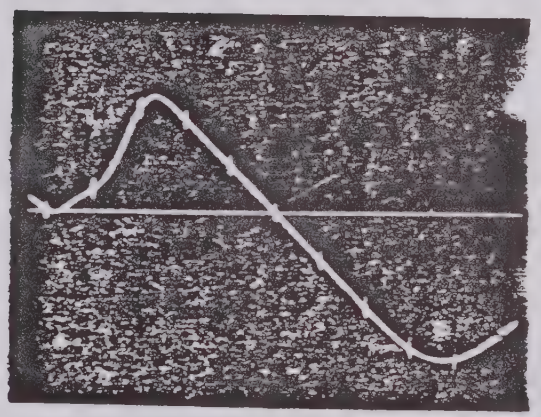

D-0276-20

Figure 4. Typical "S" Curve (Inverted) Demod
Output Increases with Increasing Frequency

SIZE	CODE IDENT NO.	DRAWING NO.
A	10110	201249
SCALE	REV	SHEET 7

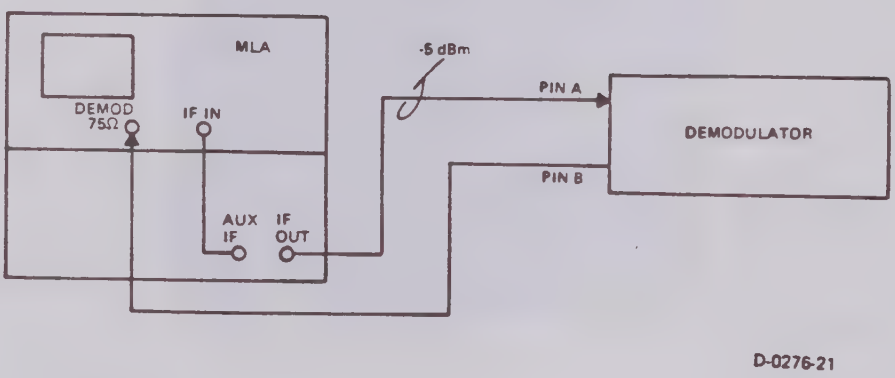

Figure 5. Linearity Test Setup

	SIZE	CODE IDENT NO.	DRAWING NO.
	A	10110	201249
	SCALE	REV	SHEET 8

d. Adjust the following controls for a flat 10% linearity display and a total group delay of less than 6 ns for 70 ±10 MHz as shown in figure 6.

1. L1, L2, C10 - Delay Equalizer.
2. R101 (Q), L5 and C42 (frequency) - Center pole.
3. R54 - Crossover frequency control (Set crossover at 70 MHz).
4. R57 (Q), C56 (frequency) - Low frequency pole (set pole frequency at 42-45 MHz).
5. R46 (Q), C48 (frequency) - High frequency pole (set pole frequency to 104-108 MHz).

e. Adjust the linearity display calibration to 1%/div and readjust if necessary for better than 1% linearity and less than 6 ns total group delay such as in figure 7.

f. Increase the MLA IF output attenuation by 16 dB and check that the linearity variation is not greater than 6%.

g. Vary the baseband frequency of the transmitter and receiver simultaneously and insure that the differential gain (linearity indication) does not vary more than 3% at the 5.6 MHz frequency. Resettin the discriminator is advisable if any difficulties are encountered in steps f and g.

h. With the equipment set as in figure 2 and the output connected to pin D, set the sensitivity to 1.0V per 10 MHz by adjusting R66. Recheck the balance per paragraph 3.2 and readjust if required. The 1.0V per 10 MHz adjustment must be done with the output of pin D connected to a high impedance point (>10k).

4.0 CLEAN CARRIER NPR TEST

a. Set up the equipment as shown in figure 8. Test for 432 channel capacity first, insure correct high and low pass filters and proper baseband level (consult table 1) into the ZFM-70 modulator. The zero reference on the receiver may be set with the BB level potentiometer of the demodulator and the set reference control of the receiver, and may be fine tuned with the equalizer controls on the noise receiver. Observe and maximize, if necessary, the NPR reading at the 14 kHz slot with L5 and the 1730 kHz slot with L1 and L2 in that order.

SIZE	CODE IDENT NO.	DRAWING NO.
A	10110	201249
SCALE	REV	SHEET 9

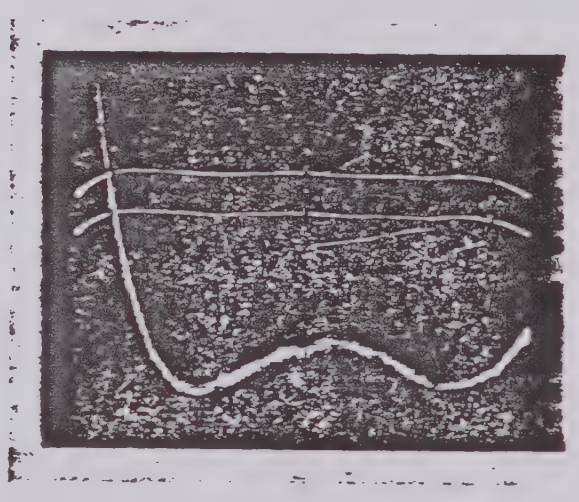

D-0276-22

Figure 6. Initial Linearity Response

SIZE	CODE IDENT NO.	DRAWING NO.
A	10110	201249
SCALE	REV	SHEET 10

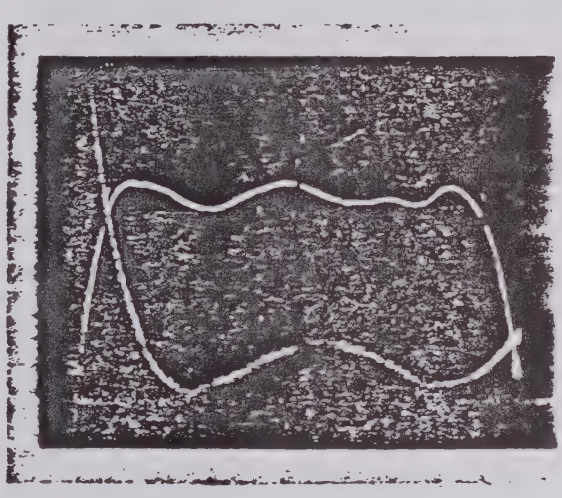

D-0276-23

Figure 7. Typical Linearity and Group Delay Response

	SIZE	CODE IDENT NO.	DRAWING NO
	A	10110	201249
	SCALE	REV	SHEET 11

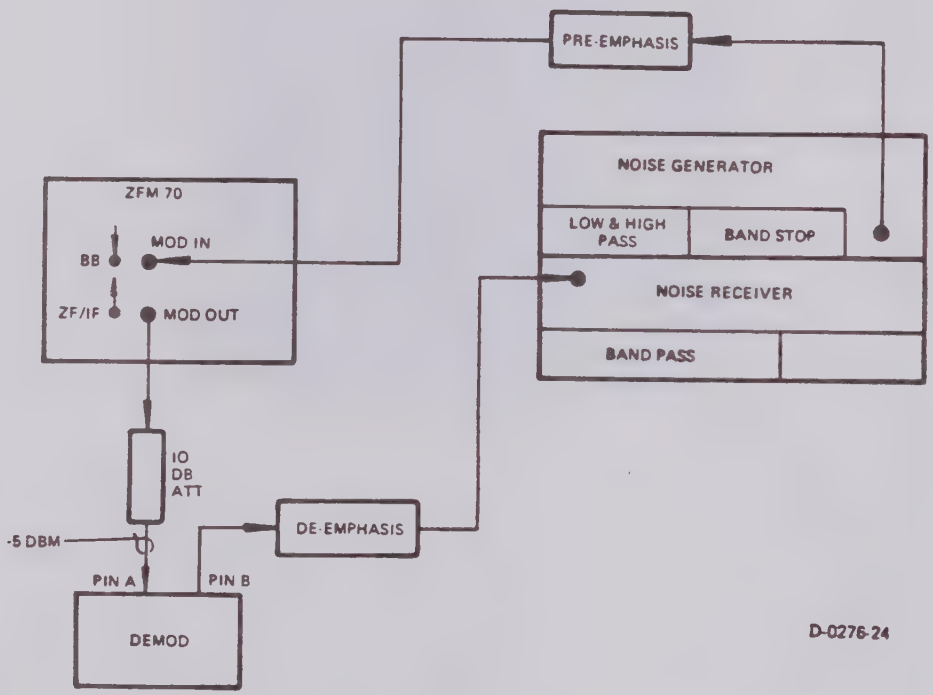

Figure 8. NPR Test Setup

SIZE	CODE IDENT NO.	DRAWING NO.
A	10110	201249
SCALE	REV	SHEET 12

b. Check linearity and delay using paragraph 3.3 steps a through g. Adjust only C48 and R101 to get the linearity if possible. Recheck NPR's and work back and forth until the linearity, group delay and NPR specifications are met.

c. Record the NPR's for all slots. After each NPR measurement disconnect the noise generator and record the idle noise.

d. Replace the 432 channel pre- and de-emphasis networks with the 12 channel networks. Adjust the noise level according to table 1, and reset the zero reference on the noise receover.

e. Record NPR readings for the low, and high slits and the idle noise readings as in step c.

f. At this point, once linearity, delay, differential gain, limiting and NPR tests have been correctly executed and the specifications have been met, record the linearity and group delay. Recheck the balance and the sensitivity at pin D per paragraphs 3.2 and 3.3 (h). Readjust if necessary and check the data sheet.

TABLE 1. NOISE LEVELS REQUIRED INTO MODULATORS FOR NPR TESTS

Channel Capacity	BW MHz	Level into Scientific-Atlanta Modulator	Level into ZFM-70 (dBm)	High Pass Filter kHz	Low Pass Filter kHz
12	1.25	- 38.85	- 24.7	12	60
432	20	- 15.78	-1.64	12	1796

Note: See Test Data Sheet for noise slot measurement frequencies.

SIZE	CODE IDENT NO.	DRAWING NO.
A	10110	201249
SCALE	REV	SHEET 13

4.1 Baseband Flatness Test

a. Set up the equipment as shown in figure 9. Back-to-back calibration is shown with dotted lines.

b. The display unit is to be set as follows:

1. SGM-21 top and middle markers within the display.
2. SGH-21 position control within graticule and full field control all the way CCW.
3. SGV-21 position control all the way CCW and full field control all the way CW. This gives maximum sensitivity on the display.
4. SGR-21 any two reference lines within graticule.

c. The level measuring set is to be set as follows:

1.	Generator level	-30 dBm
2.	Receive level	As required to get the trace at the top 1/4 of the display.
3.	Receiver measuring mode	Low noise
4.	Receiver impedance	75 ohms
5.	Sweep voltage level	Sweep width 3.5 MHz, sweep frequency 1 Hz, frequency coarse indicator slightly under 3.5 MHz.

d. Keep the dial indicator at the ZFM-70 on the modulator input at 0.2V marking.

e. Connect the equipment back to back. Position the trace within graticule by varying the receive level and the reference knob (red). Locate the zero spike and center the display within graticule to display 10 kHz to 7 MHz.

f. Mark the trace on the graticule with a grease pencil. Vary the output 1 attenuator by 0.2 dB and mark the trace on graticule.

g. Connect the modulator output of the ZFM-70 to pin A of the demod through a 10 dB, 75 ohm attenuator and the receiver input of the PSM-5 to pin D of demodulator. Locate the trace and adjust C64 for best flatness as compared to graticule markings.

SIZE	CODE IDENT NO.	DRAWING NO
A	10110	201249
SCALE	REV	SHEET 14

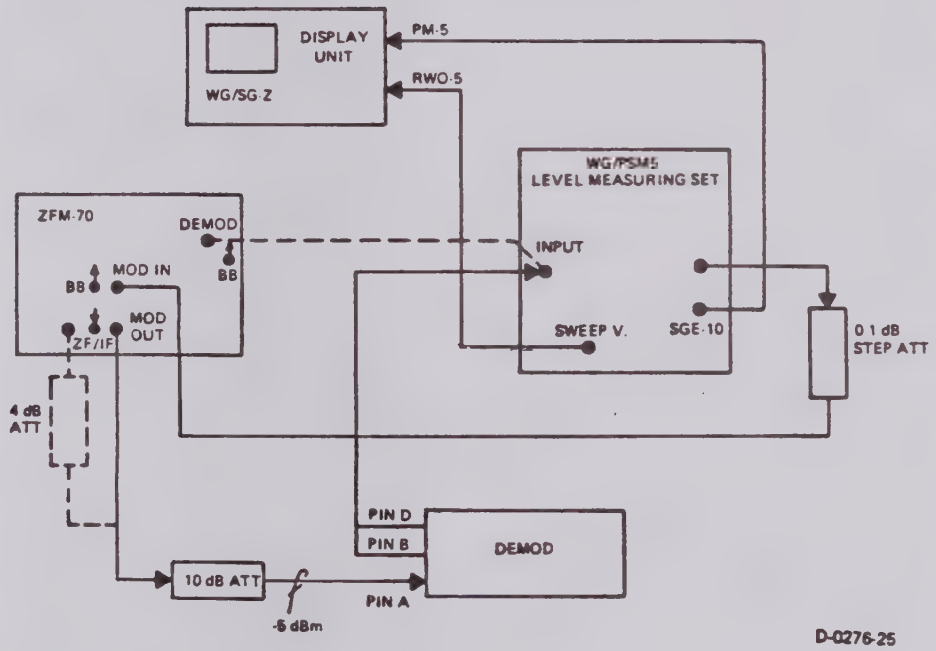

Figure 9. Baseband Frequency Response Test Setup

	SIZE	CODE IDENT NO.	DRAWING NO
	A	10110	201249
	SCALE	REV	SHEET 15

h. Connect the PSM-5 input to pin B of the demodulator. Use the demod BB level control to get the trace between the marks made in step f. Adjust C71 for best flatness as compared to trace markings. The trace must fall between the marks made in step f.

i. Terminate pin D with 75 ohms. Adjust the demod BB level slightly as required to get the trace between the calibration marks made in step f. If the frequency response remains within the marks to 6 MHz and shows no more than ±0.2 dB variation to 8 MHz check the data sheet. If this does not occur, C71 and C64 will have to be slightly adjusted.

SIZE	CODE IDENT NO.	DRAWING NO.
A	10110	201249
SCALE	REV	SHEET 16

TEST DATA SHEET

NARROW-BAND DEMODULATOR

Part Number 209411 S/N _____

Date _____ Performed by _____

Approved _____

Reference Paragraph			Required
3.1	Input Return Loss (70 ±10 MHz)	_____	26 dB
3.3B	Limiter Operational	_____ Check OK	
4.0F	BB Sensitivity set at pin D	_____ Check OK	1 V/10 MHz unterminated
3.3A	Crossover at 70	_____ Check OK	
4.0F	Balance Set	_____ Check OK	<±0.2V offset over full gain range
4.0F	Discriminator Linearity (70 ±10 MHz)	_____ %	<1%
4.0F	IF-to-BB Group Delay	_____ ns	<6 ns
4.1I	BB Flatness 15 Hz to 6 MHz	_____ Check OK	<±0.1 dB
4.1I	BB Flatness 6 MHz to 8 MHz	_____ Check OK	<±0.2 dB

Clean Carrier NPR Test

12 Channels

4.0 D Noise Slot	NPR	Idle Noise	Required
14 kHz	_____ dB	_____ dB	54 dB
56 kHz	_____ dB	_____ dB	60 dB

432 Channels

4.0A			
14 kHz	_____ dB	_____ dB	52 dB
1730 kHz	_____ dB	_____ dB	52 dB

SIZE	CODE IDENT NO.	DRAWING NO.
A	10110	201249
SCALE	REV	SHEET 17

20.3 REPLACEMENT PARTS

A replacement parts list for the narrowband demodulator follows this paragraph. This list contains descriptive information on those items that are considered replaceable in the unit.

PARTS LIST

ASSEMBLY 209411 (1) N/B FM DEMODULATOR

ITEM	COMPONENTS	DESCRIPTION	MFR	FSCM	MFR PART NUMBER
1	0143570	PW BOARD ASSY,DEMODULATOR			
2	0127195	CHASSIS			
3	0090723	COVER,LOWER DECK MODULE SERIES 400			
4	0143812	PANEL DEMODULATOR			
5	0090724	REAR PANEL,SINGLE WIDTH LWR DECK MODULE			
6	0078532	CONN CONTACT MALE COAX CRIMP .1 D CABLE	09922		RCDXK-1
7	0078535	CONN CONTACT FEMALE CRIMP NO. 24 WIRE	09922		RC24M-9
8	0079007	SCREW 4-40 X 1/8 F HD,100 DEG,SST			BY DESCRIPTION PER MS24693-C1
9	0078988	SCREW 4-40 X 3/16 F HD,100 DEG,SST			
10	0081155	NUT ESNA 4-40 MINI HEX INSRT BRSS CD PLT	72962		92-1660-40
11	0078985	SCREW 2-56 X 3/16 F HD,100 DEG,SST			BY DESCRIPTION
12	0073835	CABLE COAX 75 OHM MIN 0.110 OD	07145		RG187A/U
J1	0078531	CONN RECT BODY W/O CONTACTS 20 POS PLUG	09922		MS20PM-61
R201	0071693	POT 500 OHM 1/2W COMP PNL MT 1/2 DIA LCK	01121		RV6LAYSA501A

NOTE:

(1) PARTS LIST FOR 209411 DEMODULATOR IS SAME AS PARTS LIST FOR 131675 DEMODULATOR

PARTS LIST

ASSEMBLY 143570 PWB ASSEMBLY, DEMODULATOR

ITEM	COMPONENTS	DESCRIPTION	MFR	FSCM	MFR PART NUMBER
	0143568	SCHEMATIC DIAG. DEMODULATOR			
1	0143569	PW BOARD, DEMODULATOR WIDEBAND			
2	0143571	SILKSCREEN,DEMODULATOR WIDEBAND			
3	0072879	STANDOFF 2-56 ID 1/8 HT SWAGE CD P BRSS	CTC	71279	350-2188-09-07-00
4	0081976	SHIELD CAN BRASS .19 DIA HOLE CAD PLATED	STX	04232	307A-40 & DESCRIPTION
5	0078397	TUBING VINYL THK WALL .031ID .125OD -50F	AAA		TYGON B44-3 CLEAR
AT1	0035876	ATTNUATR 3 DB FIXED T-PAD TO-5 CASE	NAM		KM5
AT2	0035870	ATTNUATR 0 DB FIXED T-PAD TO-5 CASE	NAM		KM11
C1	0079172	CAPACITR 5.5-18 PF MIN CER DISC PC MT	ER	72982	538-011 A 5.5-18
C2	0081210	CAPACITR .01 MF 50V CER MONO X7R 10%	ER	72982	8121-050-X7R-103K
C3	0081210	CAPACITR .01 MF 50V CER MONO X7R 10%	ER	72982	8121-050-X7R-103K
C4	0076381	CAPACITR 1.5 PF 500V CER TUBULAR	A	00656	CC20CK1R5C
C5	0081210	CAPACITR .01 MF 50V CER MONO X7R 10%	ER	72982	8121-050-X7R-103K
C6	0081210	CAPACITR .01 MF 50V CER MONO X7R 10%	ER	72982	8121-050-X7R-103K
C7	0081210	CAPACITR .01 MF 50V CER MONO X7R 10%	ER	72982	8121-050-X7R-103K
C8	0073486	CAPACITR 1 PF 500V CER TUBULAR	A	00656	CC20CK010C
C9	0078600	NOT ASSIGNED			
C10	0079172	CAPACITR 5.5-18 PF MIN CER DISC PC MT	ER	72982	538-011 A 5.5-18
C11	0073493	CAPACITR 18 PF 500V SILVER MICA 5%	CD	14655	CD15CD180J03
C12	0073493	CAPACITR 18 PF 500V SILVER MICA 5%	CD	14655	CD15CD180J03
C13	0079799	CAPACITR 7 PF 500V SILVER MICA 10%	CD	84171	CD15CD070K03
C14	0081210	CAPACITR .01 MF 50V CER MONO X7R 10%	ER	72982	8121-050-X7R-103K
C15	0081210	CAPACITR .01 MF 50V CER MONO X7R 10%	ER	72982	8121-050-X7R-103K
C16	0076381	CAPACITR 1.5 PF 500V CER TUBULAR	A	00656	CC20CK1R5C
C17	0081210	CAPACITR .01 MF 50V CER MONO X7R 10%	ER	72982	8121-050-X7R-103K
C18	0081210	CAPACITR .01 MF 50V CER MONO X7R 10%	ER	72982	8121-050-X7R-103K
C19	0081210	CAPACITR .01 MF 50V CER MONO X7R 10%	ER	72982	8121-050-X7R-103K
C20	0081210	CAPACITR .01 MF 50V CER MONO X7R 10%	ER	72982	8121-050-X7R-103K
C21	0080139	CAPACITR .1 MF 50V CER MONO -20%+80%	ER	72982	8131-050-651-104Z
C22	0035654	CAPACITR 10 MF 25V SOLID TANT POL 10%	KEM	05397	T362B106K025AS
C23	0081210	CAPACITR .01 MF 50V CER MONO X7R 10%	ER	72982	8121-050-X7R-103K
C24	0077955	CAPACITR 3 PF 500V SILVER MICA +-1PF	CD	14655	CD6CD030C03
C25	0081210	CAPACITR .01 MF 50V CER MONO X7R 10%	ER	72982	8121-050-X7R-103K
C26	0081210	CAPACITR .01 MF 50V CER MONO X7R 10%	ER	72982	8121-050-X7R-103K
C27	0081210	CAPACITR .01 MF 50V CER MONO X7R 10%	ER	72982	8121-050-X7R-103K
C28	0081210	CAPACITR .01 MF 50V CER MONO X7R 10%	ER	72982	8121-050-X7R-103K
C29	0081210	CAPACITR .01 MF 50V CER MONO X7R 10%	ER	72982	8121-050-X7R-103K
C30	0070470	CAPACITR 10 PF 500V SILVER MICA 5%	CD	14655	CD15CD100J03
C31	0070492	CAPACITR 33 PF 500V SILVER MICA 5%	CD	14655	CD15ED330J03
C32	0070470	CAPACITR 10 PF 500V SILVER MICA 5%	CD	14655	CD15CD100J03
C33	0082921	CAPACITR 150 MF 15V SOLID TANT POL 10%	KEM	05397	T362D157K015AS
C34	0082921	CAPACITR 150 MF 15V SOLID TANT POL 10%	KEM	05397	T362D157K015AS
C35	0080139	CAPACITR .1 MF 50V CER MONO -20%+80%	ER	72982	8131-050-651-104Z
C36	0081995	CAPACITR .001 MF 100V CER MONO X7R 10%	ER	72982	8121-100-X7R-102K
C37	0081995	CAPACITR .001 MF 100V CER MONO X7R 10%	ER	72982	8121-100-X7R-102K
C38	0081210	CAPACITR .01 MF 50V CER MONO X7R 10%	ER	72982	8121-050-X7R-103K

PARTS LIST

ASSEMBLY 143570 PWB ASSEMBLY, DEMODULATOR - continued

ITEM	COMPONENTS	DESCRIPTION	MFR	FSCM	MFR PART NUMBER
C39	0081210	CAPACITR .01 MF 50V CER MONO X7R 10%	ER	72982	8121-050-X7R-103K
C40	0081995	CAPACITR .001 MF 100V CER MONO X7R 10%	ER	72982	8121-100-X7R-102K
C41	0073491	CAPACITR 12 PF 500V SILVER MICA 5%	CD	14655	CD15CD120J03
C42	0083270	CAPACITR 1.7-11 PF AIR PC MT	J	74970	187-0106-005
C43	0078700	FACTORY SELECTED VALUE			
C44	0081210	CAPACITR .01 MF 50V CER MONO X7R 10%	ER	72982	8121-050-X7R-103K
C45	0081210	CAPACITR .01 MF 50V CER MONO X7R 10%	ER	72982	8121-050-X7R-103K
C46	0081210	CAPACITR .01 MF 50V CER MONO X7R 10%	ER	72982	8121-050-X7R-103K
C47	0081995	CAPACITR .001 MF 100V CER MONO X7R 10%	ER	72982	8121-100-X7R-102K
C48	0079097	CAPACITR 3-15 PF MIN CER DISC PC MT	ER	72982	538-011 D 3-15
C49	0081210	CAPACITR .01 MF 50V CER MONO X7R 10%	ER	72982	8121-050-X7R-103K
C50	0081210	CAPACITR .01 MF 50V CER MONO X7R 10%	ER	72982	8121-050-X7R-103K
C51	0081210	CAPACITR .01 MF 50V CER MONO X7R 10%	ER	72982	8121-050-X7R-103K
C52	0073493	CAPACITR 18 PF 500V SILVER MICA 5%	CD	14655	CD15CD180J03
C53	0073492	CAPACITR 15 PF 500V SILVER MICA 5%	CD	00656	CD15CD150J03
C54	0081210	CAPACITR .01 MF 50V CER MONO X7R 10%	ER	72982	8121-050-X7R-103K
C55	0078600	NOT ASSIGNED			
C56	0078976	CAPACITR 15-60 PF MIN CER DISC PC MT	ER	72982	538-011 F 15-60
C57	0078600	NOT ASSIGNED			
C58	0081210	CAPACITR .01 MF 50V CER MONO X7R 10%	ER	72982	8121-050-X7R-103K
C59	0081210	CAPACITR .01 MF 50V CER MONO X7R 10%	ER	72982	8121-050-X7R-103K
C60	0073492	CAPACITR 15 PF 500V SILVER MICA 5%	CD	00656	CD15CD150J03
C61	0073492	CAPACITR 15 PF 500V SILVER MICA 5%	CD	00656	CD15CD150J03
C62	0082921	CAPACITR 150 MF 15V SOLID TANT POL 10%	KEM	05397	T362D157K015AS
C63	0080139	CAPACITR .1 MF 50V CER MONO -20%+80%	ER	72982	8131-050-651-104Z
C64	0079097	CAPACITR 3-15 PF MIN CER DISC PC MT	ER	72982	538-011 D 3-15
C65	0082921	CAPACITR 150 MF 15V SOLID TANT POL 10%	KEM	05397	T362D157K015AS
C66	0080139	CAPACITR .1 MF 50V CER MONO -20%+80%	ER	72982	8131-050-651-104Z
C67	0080139	CAPACITR .1 MF 50V CER MONO -20%+80%	ER	72982	8131-050-651-104Z
C68	0080139	CAPACITR .1 MF 50V CER MONO -20%+80%	ER	72982	8131-050-651-104Z
C69	0082921	CAPACITR 150 MF 15V SOLID TANT POL 10%	KEM	05397	T362D157K015AS
C70	0082921	CAPACITR 150 MF 15V SOLID TANT POL 10%	KEM	05397	T362D157K015AS
C71	0079171	CAPACITR 9-35 PF MIN CER DISC PC MT	ER	72982	538-011 D 9-35
C72	0080139	CAPACITR .1 MF 50V CER MONO -20%+80%	ER	72982	8131-050-651-104Z
C73	0080139	CAPACITR .1 MF 50V CER MONO -20%+80%	ER	72982	8131-050-651-104Z
C74	0082921	CAPACITR 150 MF 15V SOLID TANT POL 10%	KEM	05397	T362D157K015AS
C75	0080139	CAPACITR .1 MF 50V CER MONO -20%+80%	ER	72982	8131-050-651-104Z
C76	0035654	CAPACITR 10 MF 25V SOLID TANT POL 10%	KEM	05397	T362B106K025AS
C77	0080139	CAPACITR .1 MF 50V CER MONO -20%+80%	ER	72982	8131-050-651-104Z
C78	0082921	CAPACITR 150 MF 15V SOLID TANT POL 10%	KEM	05397	T362D157K015AS
C79	0077955	CAPACITR 3 PF 500V SILVER MICA +-1PF	CD	14655	CD6CD030C03
C80	0080142	CAPACITR 20 PF 500V SILVER MICA 5%	CD	14655	CD15ED200J03
C81	0070470	CAPACITR 10 PF 500V SILVER MICA 5%	CD	14655	CD15CD100J03
C82	0080139	CAPACITR .1 MF 50V CER MONO -20%+80%	ER	72982	8131-050-651-104Z
C83	0082921	CAPACITR 150 MF 15V SOLID TANT POL 10%	KEM	05397	T362D157K015AS
C84	0078600	NOT ASSIGNED			
C85	0078600	NOT ASSIGNED			
C86	0078600	NOT ASSIGNED			

PARTS LIST

ASSEMBLY 143570 PWB ASSEMBLY, DEMODULATOR - continued

ITEM	COMPONENTS	DESCRIPTION	MFR	FSCM	MFR PART NUMBER
C87	0080139	CAPACITR .1 MF 50V CER MONO -20%+80%	ER	72982	8131-050-651-104Z
C88	0080139	CAPACITR .1 MF 50V CER MONO -20%+80%	ER	72982	8131-050-651-104Z
C89	0087661	CAPACITR .6-3.5 PF AIR VERT PC MT	JOH		8051
CR1	0077869	DIODE 1N751A SI ZEN 5.1V 5% .4W	MOS	04713	1N751A
CR2	0071108	DIODE 1N87A DET VIDEO GER PT CONTACT	GE	24446	1N87A
CR3	0071108	DIODE 1N87A DET VIDEO GER PT CONTACT	GE	24446	1N87A
CR4	0071122	DIODE 1N914 SIL 75V 75MA	SY	80368	1N914
CR5	0071122	DIODE 1N914 SIL 75V 75MA	SY	80368	1N914
CR6	0076705	DIODE 1N4733A SI ZEN 5.1V 5% 1W	MOS	04713	1N4733A
CR7	0080004	DIODE 5082-2805 DET UHF SCHOTTKY QUAD	HP	28480	5082-2805
CR8	0080004	DIODE 5082-2805 DET UHF SCHOTTKY QUAD	HP	28480	5082-2805
CR9	0078600	NOT ASSIGNED			
CR10	0078600	NOT ASSIGNED			
E1	0082909	TERMINAL PRESS MT DISCONNECT .058 PIN	AMP	00779	60599-1
E2	0082909	TERMINAL PRESS MT DISCONNECT .058 PIN	AMP	00779	60599-1
E3	0082909	TERMINAL PRESS MT DISCONNECT .058 PIN	AMP	00779	60599-1
E4	0082909	TERMINAL PRESS MT DISCONNECT .058 PIN	AMP	00779	60599-1
E5	0082909	TERMINAL PRESS MT DISCONNECT .058 PIN	AMP	00779	60599-1
E6	0078600	NOT ASSIGNED			
E7	0078600	NOT ASSIGNED			
E8	0081718	CORE BEAD FERRITE 7D .138X.037X.150L GRN	STK	78488	57-1413
E9	0081718	CORE BEAD FERRITE 7D .138X.037X.150L GRN	STK	78488	57-1413
E10	0081718	CORE BEAD FERRITE 7D .138X.037X.150L GRN	STK	78488	57-1413
E11	0081718	CORE BEAD FERRITE 7D .138X.037X.150L GRN	STK	78488	57-1413
E12	0081718	CORE BEAD FERRITE 7D .138X.037X.150L GRN	STK	78488	57-1413
E13	0081718	CORE BEAD FERRITE 7D .138X.037X.150L GRN	STK	78488	57-1413
E14	0081718	CORE BEAD FERRITE 7D .138X.037X.150L GRN	STK	78488	57-1413
E15	0081718	CORE BEAD FERRITE 7D .138X.037X.150L GRN	STK	78488	57-1413
E16	0081718	CORE BEAD FERRITE 7D .138X.037X.150L GRN	STK	78488	57-1413
E17	0081718	CORE BEAD FERRITE 7D .138X.037X.150L GRN	STK	78488	57-1413
E18	0081718	CORE BEAD FERRITE 7D .138X.037X.150L GRN	STK	78488	57-1413
E19	0081718	CORE BEAD FERRITE 7D .138X.037X.150L GRN	STK	78488	57-1413
E20	0081718	CORE BEAD FERRITE 7D .138X.037X.150L GRN	STK	78488	57-1413
E21	0081718	CORE BEAD FERRITE 7D .138X.037X.150L GRN	STK	78488	57-1413
E22	0081718	CORE BEAD FERRITE 7D .138X.037X.150L GRN	STK	78488	57-1413
E23	0081718	CORE BEAD FERRITE 7D .138X.037X.150L GRN	STK	78488	57-1413
L1	0145347	INDUCTOR 7.5 T #24 6-32X3/8 INCH CARB J	CCT	02113	PER CONT. DWG.
L2	0145344	INDUCTOR 4.5 T #24 6-32X3/8 INCH CARB J	CCT	02113	PER CONT. DWG.
L3	0079166	INDUCTOR .15 UH SUBMIN UNSHLD 10%	DP	91637	IR-2
L4	0079166	INDUCTOR .15 UH SUBMIN UNSHLD 10%	DP	91637	IR-2
L5	0083464	INDUCTOR 8 1/2T #24 6-32X1/4 IN. CARB J	CCT	02113	V1541
L6	0079165	INDUCTOR .1 UH SUBMIN UNSHLD 10%	DP	91637	IR-2
L7	0078600	NOT ASSIGNED			
L8	0077954	INDUCTOR .47 UH SUBMIN UNSHLD 10%	DP	91637	IR-2
L9	0078600	NOT ASSIGNED			
L10	0082593	INDUCTOR 3.9 UH SUBMIN UNSHLD 10%	DP	91637	IR-2
L11	0078508	INDUCTOR 8.2 UH SUBMIN UNSHLD 10%	DP	91637	IR-2
L12	0078508	INDUCTOR 8.2 UH SUBMIN UNSHLD 10%	DP	91637	IR-2

PARTS LIST

ASSEMBLY 143570 PWB ASSEMBLY, DEMODULATOR - continued

ITEM	COMPONENTS	DESCRIPTION	MFR	FSCM	MFR PART NUMBER
Q1	0075091	TRANSSTR 2N2857 NPN SIL	MOS	04713	2N2857
Q2	0079329	TRANSSTR 2N5109 NPN SIL	RCA	79089	2N5109
Q3	0075091	TRANSSTR 2N2857 NPN SIL	MOS	04713	2N2857
Q4	0079329	TRANSSTR 2N5109 NPN SIL	RCA	79089	2N5109
Q5	0079329	TRANSSTR 2N5109 NPN SIL	RCA	79089	2N5109
Q6	0075091	TRANSSTR 2N2857 NPN SIL	MOS	04713	2N2857
Q7	0079329	TRANSSTR 2N5109 NPN SIL	RCA	79089	2N5109
Q8	0079329	TRANSSTR 2N5109 NPN SIL	RCA	79089	2N5109
Q9	0077148	TRANSSTR 2N3251 PNP SIL	MOS	04713	2N3251
Q10	0079329	TRANSSTR 2N5109 NPN SIL	RCA	79089	2N5109
Q11	0083032	TRANSSTR 2N2222A NPN SIL	XZ		2N2222A
Q12	0077148	TRANSSTR 2N3251 PNP SIL	MOS	04713	2N3251
Q13	0077147	TRANSSTR 2N3947 NPN SIL	MOS	04713	2N3947
Q14	0078850	TRANSSTR 2N2219 NPN SIL	FSC	13715	2N2219
Q15	0078850	TRANSSTR 2N2219 NPN SIL	FSC	13715	2N2219
Q16	0077148	TRANSSTR 2N3251 PNP SIL	MOS	04713	2N3251
Q17	0077147	TRANSSTR 2N3947 NPN SIL	MOS	04713	2N3947
Q18	0078850	TRANSSTR 2N2219 NPN SIL	FSC	13715	2N2219
Q19	0078850	TRANSSTR 2N2219 NPN SIL	FSC	13715	2N2219
Q20	0077147	TRANSSTR 2N3947 NPN SIL	MOS	04713	2N3947
R1	0083089	RESISTOR 75.0 OHM RN55C 1% MTL FLM	DP		RN55C75R0F
R2	0074687	RESISTOR 220 OHM 1/4W 5% COMP	AB	01121	RCR07G221JS
R3	0071926	RESISTOR 470 OHM 1/4W 10% COMP	AB	01121	RCR07G471KS
R4	0071941	RESISTOR 820 OHM 1/4W 10% COMP	AB	01121	RCR07G821KS
R5	0071960	RESISTOR 1.2K OHM 1/4W 10% COMP	AB	01121	RCR07G122KS
R6	0071917	RESISTOR 330 OHM 1/4W 5% COMP	AB	01121	RCR07G331JS
R7	0083089	RESISTOR 75.0 OHM RN55C 1% MTL FLM	DP		RN55C75R0F
R8	0071873	RESISTOR 56 OHM 1/4W 10% COMP	AB	01121	RCR07G560KS
R9	0071879	RESISTOR 82 OHM 1/4W 10% COMP	AB	01121	RCR07G820KS
R10	0083089	RESISTOR 75.0 OHM RN55C 1% MTL FLM	DP		RN55C75R0F
R11	0071941	RESISTOR 820 OHM 1/4W 10% COMP	AB	01121	RCR07G821KS
R12	0071926	RESISTOR 470 OHM 1/4W 10% COMP	AB	01121	RCR07G471KS
R13	0071917	RESISTOR 330 OHM 1/4W 5% COMP	AB	01121	RCR07G331JS
R14	0071960	RESISTOR 1.2K OHM 1/4W 10% COMP	AB	01121	RCR07G122KS
R15	0071966	RESISTOR 1.5K OHM 1/4W 10% COMP	AB	01121	RCR07G152KS
R16	0071879	RESISTOR 82 OHM 1/4W 10% COMP	AB	01121	RCR07G820KS
R17	0071926	RESISTOR 470 OHM 1/4W 10% COMP	AB	01121	RCR07G471KS
R18	0078768	POT 50K OHM 1/2W CER 3/8 DIA VERT ADJ	AB	01121	SV5031
R19	0071887	RESISTOR 100 OHM 1/4W 10% COMP	AB	01121	RCR07G101KS
R20	0071926	RESISTOR 470 OHM 1/4W 10% COMP	AB	01121	RCR07G471KS
R21	0071926	RESISTOR 470 OHM 1/4W 10% COMP	AB	01121	RCR07G471KS
R22	0071926	RESISTOR 470 OHM 1/4W 10% COMP	AB	01121	RCR07G471KS
R23	0076723	RESISTOR 39 OHM 1/4W 10% COMP	AB	01121	RCR07G390KS
R24	0083797	RESISTOR 71.5 OHM RN55C 1% MTL FLM	DP		RN55C71R5F
R25	0071907	RESISTOR 220 OHM 1/4W 10% COMP	AB	01121	RCR07G221KS
R26	0071880	RESISTOR 82 OHM 1/2W 10% COMP	AB	01121	RCR20G820KS
R27	0083089	RESISTOR 75.0 OHM RN55C 1% MTL FLM	DP		RN55C75R0F

PARTS LIST

ASSEMBLY 143570 PWB ASSEMBLY, DEMODULATOR - continued

ITEM	COMPONENTS	DESCRIPTION	MFR	FSCM	MFR PART NUMBER
R28	0071973	RESISTOR 1.8K OHM 1/4W 10% COMP	AB	01121	RCR07G182KS
R29	0071887	RESISTOR 100 OHM 1/4W 10% COMP	AB	01121	RCR07G101KS
R30	0072019	RESISTOR 8.2K OHM 1/4W 10% COMP	AB	01121	RCR07G822KS
R31	0071961	RESISTOR 1.2K OHM 1/2W 10% COMP	AB	01121	RCR20G122KS
R32	0083848	RESISTOR 48.7 OHM RN55D 1% MTL FLM	DP		RN55D48R7F
R33	0083089	RESISTOR 75.0 OHM RN55C 1% MTL FLM	DP		RN55C75R0F
R34	0078700	FACTORY SELECTED VALUE			
R35	0071926	RESISTOR 470 OHM 1/4W 10% COMP	AB	01121	RCR07G471KS
R36	0071938	RESISTOR 680 OHM 1/4W 10% COMP	AB	01121	RCR07G681KS
R37	0071938	RESISTOR 680 OHM 1/4W 10% COMP	AB	01121	RCR07G681KS
R38	0071937	RESISTOR 680 OHM 1/4W 5% COMP	AB	01121	RCR07G681JS
R39	0071951	RESISTOR 1.0K OHM 1/4W 10% COMP	AB	01121	RCR07G102KS
R40	0079318	RESISTOR 121 OHM RN55C 1% MTL FLM	DP		RN55C1210F
R41	0074698	RESISTOR 560 OHM 1/4W 5% COMP	AB	01121	RCR07G561JS
R42	0074711	RESISTOR 2.7K OHM 1/4W 5% COMP	AB	01121	RCR07G272JS
R43	0076723	RESISTOR 39 OHM 1/4W 10% COMP	AB	01121	RCR07G390KS
R44	0071939	RESISTOR 680 OHM 1/2W 10% COMP	AB	01121	RCR20G681KS
R45	0075551	RESISTOR 10 OHM 1/4W 5% COMP	AB	01121	RCR07G100JS
R46	0078722	POT 5K OHM 1/2W CER 3/8 DIA VERT ADJ	AB	01121	SV5021
R47	0078600	NOT ASSIGNED			
R48	0071931	RESISTOR 560 OHM 1/4W 10% COMP	AB	01121	RCR07G561KS
R49	0071951	RESISTOR 1.0K OHM 1/4W 10% COMP	AB	01121	RCR07G102KS
R50	0074679	RESISTOR 150 OHM 1/4W 5% COMP	AB	01121	RCR07G151JS
R51	0079318	RESISTOR 121 OHM RN55C 1% MTL FLM	DP		RN55C1210F
R52	0074698	RESISTOR 560 OHM 1/4W 5% COMP	AB	01121	RCR07G561JS
R53	0074711	RESISTOR 2.7K OHM 1/4W 5% COMP	AB	01121	RCR07G272JS
R54	0078725	POT 100 OHM 1/2W CER 3/8 DIA VERT ADJ	AB	01121	SV1011
R55	0071939	RESISTOR 680 OHM 1/2W 10% COMP	AB	01121	RCR20G681KS
R56	0071887	RESISTOR 100 OHM 1/4W 10% COMP	AB	01121	RCR07G101KS
R57	0078724	POT 1K OHM 1/2W CER 3/8 DIA VERT ADJ	AB	01121	SV1021
R58	0078600	NOT ASSIGNED			
R59	0071931	RESISTOR 560 OHM 1/4W 10% COMP	AB	01121	RCR07G561KS
R60	0071951	RESISTOR 1.0K OHM 1/4W 10% COMP	AB	01121	RCR07G102KS
R61	0074679	RESISTOR 150 OHM 1/4W 5% COMP	AB	01121	RCR07G151JS
R62	0071989	RESISTOR 3.3K OHM 1/4W 10% COMP	AB	01121	RCR07G332KS
R63	0077269	POT 2K OHM 1/2W CER 1/4 DIA VERT ADJ	H	73138	62PR2K
R64	0074711	RESISTOR 2.7K OHM 1/4W 5% COMP	AB	01121	RCR07G272JS
R65	0078938	RESISTOR 68 OHM 1/4W 5% COMP	AB	01121	RCR07G680JS
R66	0078725	POT 100 OHM 1/2W CER 3/8 DIA VERT ADJ	AB	01121	SV1011
R67	0076707	RESISTOR 2.7 OHM 1/4W 10% COMP	AB	01121	RCR07G2R7KS
R68	0071951	RESISTOR 1.0K OHM 1/4W 10% COMP	AB	01121	RCR07G102KS
R69	0071876	RESISTOR 68 OHM 1/4W 10% COMP	AB	01121	RCR07G680KS
R70	0071918	RESISTOR 330 OHM 1/4W 10% COMP	AB	01121	RCR07G331KS
R71	0071993	RESISTOR 3.9K OHM 1/4W 10% COMP	AB	01121	RCR07G392KS
R72	0074698	RESISTOR 560 OHM 1/4W 5% COMP	AB	01121	RCR07G561JS

PARTS LIST

ASSEMBLY 143570 PWB ASSEMBLY, DEMODULATOR - continued

ITEM	COMPONENTS	DESCRIPTION	MFR	FSCM	MFR PART NUMBER
R73	0076707	RESISTOR 2.7 OHM 1/4W 10% COMP	AB	01121	RCR07G2R7KS
R74	0071918	RESISTOR 330 OHM 1/4W 10% COMP	AB	01121	RCR07G331KS
R75	0071951	RESISTOR 1.0K OHM 1/4W 10% COMP	AB	01121	RCR07G102KS
R76	0071951	RESISTOR 1.0K OHM 1/4W 10% COMP	AB	01121	RCR07G102KS
R77	0071907	RESISTOR 220 OHM 1/4W 10% COMP	AB	01121	RCR07G221KS
R78	0083089	RESISTOR 75.0 OHM RN55C 1% MTL FLM	DP		RN55C75R0F
R79	0074687	RESISTOR 220 OHM 1/4W 5% COMP	AB	01121	RCR07G221JS
R80	0071989	RESISTOR 3.3K OHM 1/4W 10% COMP	AB	01121	RCR07G332KS
R81	0077269	POT 2K OHM 1/2W CER 1/4 DIA VERT ADJ	H	73138	62PR2K
R82	0074711	RESISTOR 2.7K OHM 1/4W 5% COMP	AB	01121	RCR07G272JS
R83	0071887	RESISTOR 100 OHM 1/4W 10% COMP	AB	01121	RCR07G101KS
R84	0078600	NOT ASSIGNED			
R85	0075651	RESISTOR 2.0K OHM 1/4W 5% COMP	AB	01121	RCR07G202JS
R86	0071941	RESISTOR 820 OHM 1/4W 10% COMP	AB	01121	RCR07G821KS
R87	0074702	RESISTOR 1.0K OHM 1/4W 5% COMP	AB	01121	RCR07G102JS
R88	0071993	RESISTOR 3.9K OHM 1/4W 10% COMP	AB	01121	RCR07G392KS
R89	0074698	RESISTOR 560 OHM 1/4W 5% COMP	AB	01121	RCR07G561JS
R90	0071918	RESISTOR 330 OHM 1/4W 10% COMP	AB	01121	RCR07G331KS
R91	0076707	RESISTOR 2.7 OHM 1/4W 10% COMP	AB	01121	RCR07G2R7KS
R92	0071951	RESISTOR 1.0K OHM 1/4W 10% COMP	AB	01121	RCR07G102KS
R93	0071951	RESISTOR 1.0K OHM 1/4W 10% COMP	AB	01121	RCR07G102KS
R94	0074687	RESISTOR 220 OHM 1/4W 5% COMP	AB	01121	RCR07G221JS
R95	0083089	RESISTOR 75.0 OHM RN55C 1% MTL FLM	DP		RN55C75R0F
R96	0071918	RESISTOR 330 OHM 1/4W 10% COMP	AB	01121	RCR07G331KS
R97	0078931	RESISTOR 4.99K OHM RN55C 1% MTL FLM	DP		RN55C4991F
R98	0079104	RESISTOR 5.36K OHM RN55C 1% MTL FLM	DP		RN55C5361F
R99	0075668	RESISTOR 8.2K OHM 1/4W 5% COMP	AB	01121	RCR07G822JS
R100	0078600	NOT ASSIGNED			
R101	0080370	POT 250 OHM 1/2W CER 3/8 DIA VERT ADJ	AB	01121	SV2511
R102	0075651	RESISTOR 2.0K OHM 1/4W 5% COMP	AB	01121	RCR07G202JS
R103	0078600	NOT ASSIGNED			
R104	0074702	RESISTOR 1.0K OHM 1/4W 5% COMP	AB	01121	RCR07G102JS
RT1	0073038	THERMSTR 1K OHM	VEC	83186	31D10
U1	0084614	IC ECL GATE NOR/OR 4-IN DUAL	MOS	04713	MC1660L
W1	0143824	JUMPER WIRE ASSY			
W2	0143824	JUMPER WIRE ASSY			
XAT2	0081666	SOCKET TO-5 CASE 3-PIN	RBN	06776	SD5173

MANUFACTURER CODES

FSCM	Manufacturer
00656	Aerovox Corporation New Bedford, Massachusetts
00779	Amp Incorporated Harrisburg, Pennsylvania
01121	Allen Bradley Company Milwaukee, Wisconsin
04232	Staver Company Bay Shore, New York
04713	Motorolo Semiconductor Products Phoenix, Arizona
05397	Kemet Div-Union Carbide Cleveland, Ohio
06776	Robinson Nugent New Albany, Indiana
07145	Times Wire and Cable Company Wallingford, Connecticut
09922	Burndy Corporation Norwalk, Connecticut
13715	Fairchild Semiconductor Corporation San Rafael, California
14655	Cornell-Dublier Corporation South Plainfield, New Jersey
28480	Hewlett-Packard Palo Alto, California
71279	Cambridge Thermionic Corporation Cambridge, Massachusetts
72962	Elastic Stop Nut Corporation Union, New Jersey
72982	Erie Resistor Corporation Erie, Pennsylvania
73138	Beckman Instrument Fullerton, California

MANUFACTURER CODES--continued

FSCM	Manufacturer
78488	Stackpole Carbon Company Saint Marys, Pennsylvania
79089	Radio Corporation of America Harrison, New Jersey
80368	Sylvania Electric Products New York, New York
84171	Andrew Corporation Chicago, Illinois
91637	Dale Products Incorporated Columbus, Nebraska

WIRE RUN LIST

	WIRE NO.	FROM	TO	COLOR	LENGTH
2.	W1	J1-A	BD BD GND	CLEAR SHLD	4.0
2.	W2	J1-B	BD BD GND	CLEAR SHLD	
2.	W3	J1-D	BD BD GND	CLEAR SHLD	
	W4	J1-H	BD	YEL	
	W5	J1-R	BD	VIO	
	W6	J1-U	BD	BLK	
	W7	J1-W	BD	WHT/RED	
	W8	J1-X	BD	WHT/VIO	
	W9	R201	BD	WHT	3.5
	W10	R201	BD	BLK	3.5
	W11	R201	BD	WHT/GRN	4.0

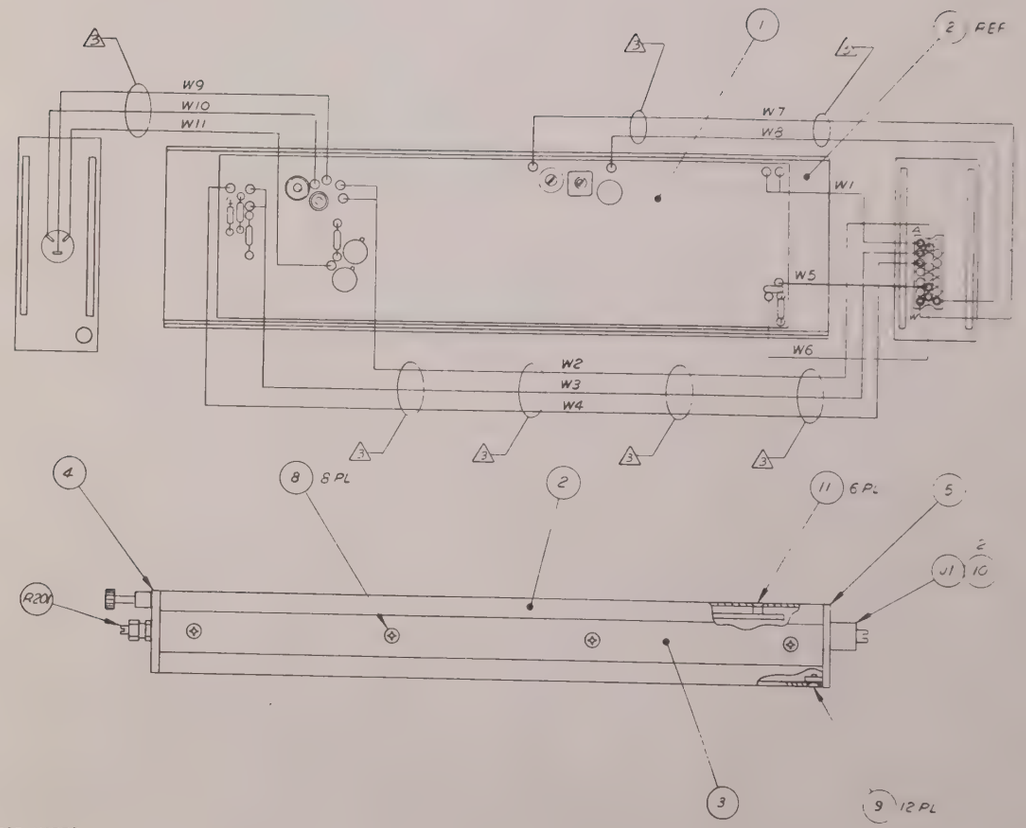

209411

(ASSEMBLE AS PER DRAWING NO. 131675)

NOTES

1. ALL WIRE NO. 24 STRANDED EXCEPT WHERE NOTED
2. ALL COAX IS RG 187
3. PUT TIE-WRAPS ONLY WHERE NOTED.

Figure 20-3. N/B FM Demodulator, Assembly

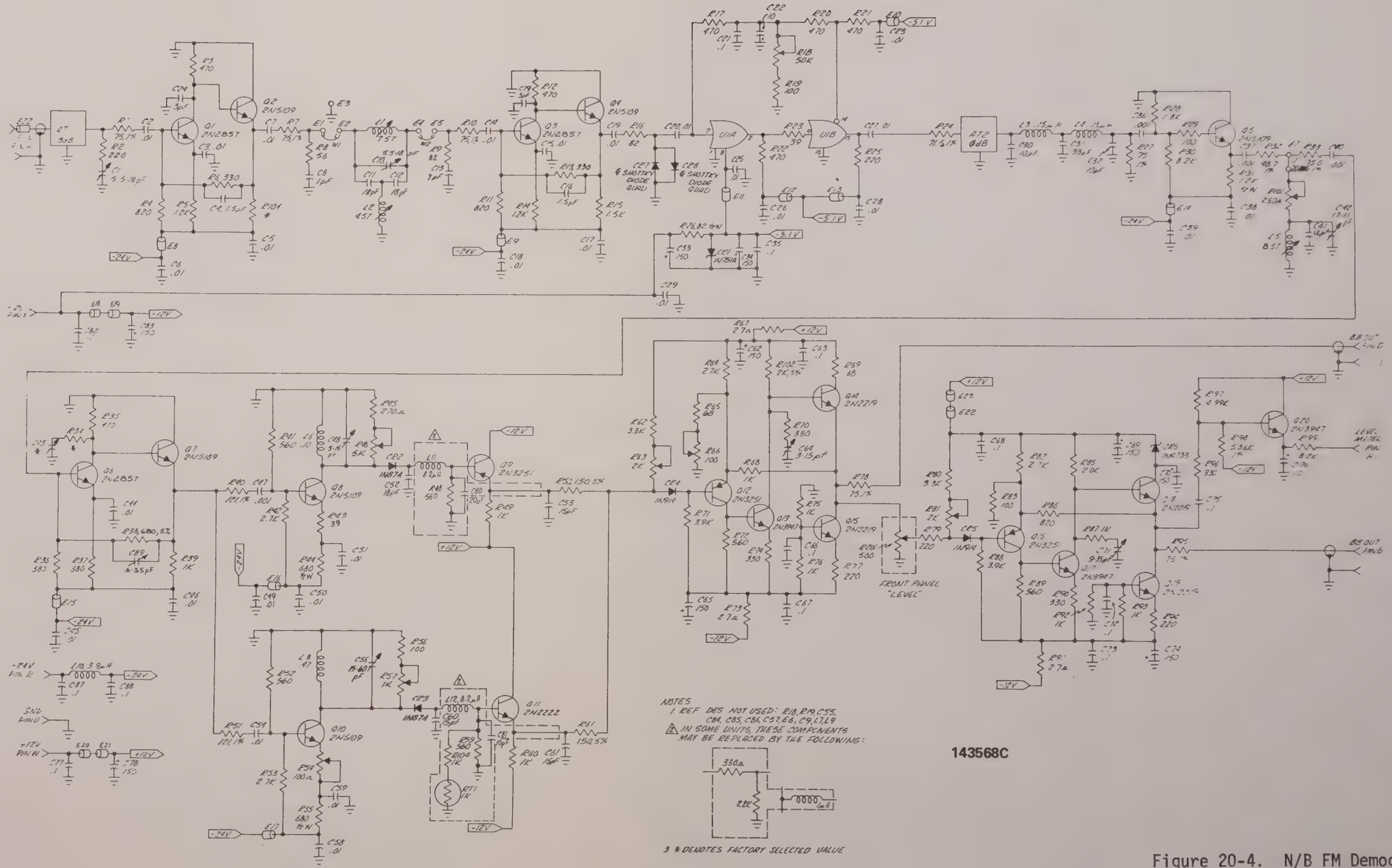

Figure 20-4. N/B FM Demodulator, Schematic

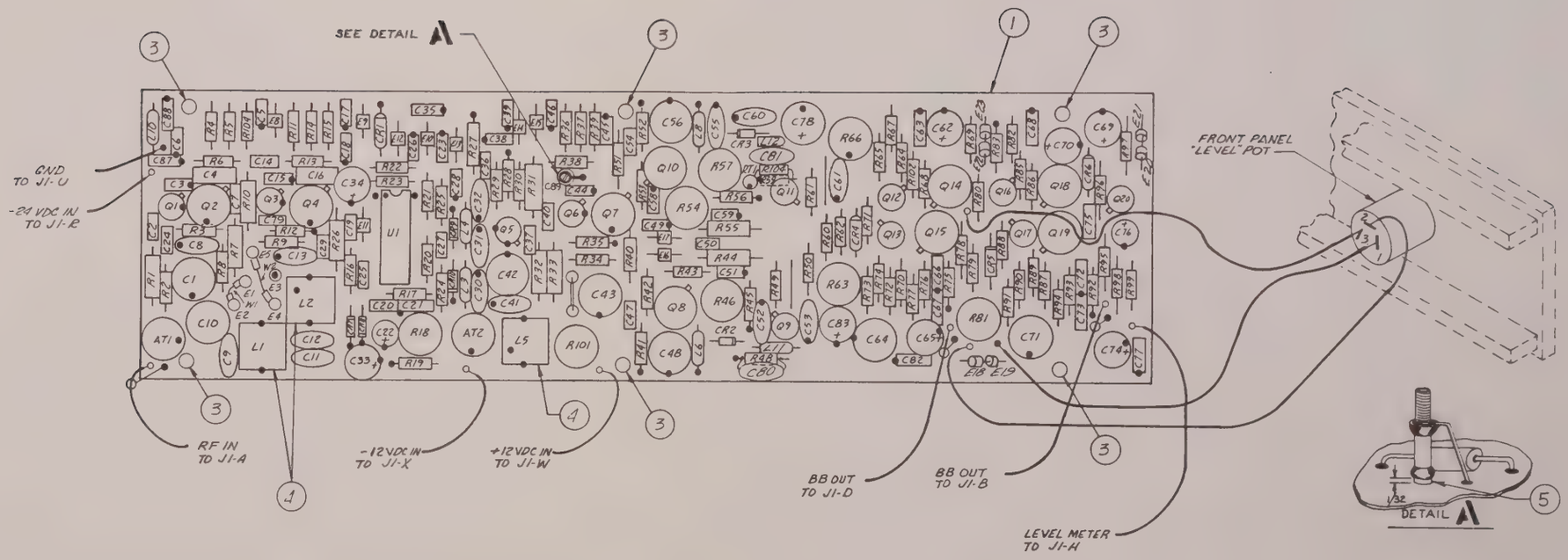

NOTES:

1. BLACK DOTS INDICATE CONNECTION TO GROUND PLANE. SINCE THESE ARE PLATED THROUGH HOLES THESE POINTS MUST NOT BE TOP SOLDERED.
2. ASSEMBLE L11 & L12 1/4" FROM BOARD AS SHOWN BELOW:

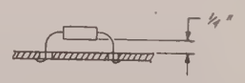

3. ONE HOLE MUST BE DRILLED ON EACH SIDE OF THE GROUND HOLE OF R59. SOLDER ONE SIDE OF C81 TO GROUND ON THE INDUCTOR'S (L12) SIDE AND SOLDER ONE LEG OF THE THERMISTOR (RT1) TO GROUND ON THE TRANSISTOR'S (Q11) SIDE. WRAP AND SOLDER THE OTHER LEG OF THE THERMISTOR TO ONE SIDE OF R104 AT APPROXIMATELY 1/8" OFF OF THE GROUND PLANE. WRAP AND SOLDER THE OTHER LEADS OF R104 AND C81 TOGETHER WITH THE ONE OF R59.

143570

Figure 20-5. N/B FM Demodulator, Assembly

IMPORTANT NOTE

The information behind this tabbed divider may apply to more than one item. Check all pages carefully.

33R0602

IMPORTANT NOTE

The information behind this tabbed divider may apply to more than one item. Check all pages carefully.

33R0602

SECTION 21A
THRESHOLD EXTENSION UNIT (TEU) MODEL C
PART NUMBER 201880

21A.1 DESCRIPTION

The Model C Threshold Extension Unit (TEU) is a plug-in module intended for operation with Scientific-Atlanta Series 411 Receiver Equipment. This unit, unlike early models of the TEU, operates without the aid of the receiver demodulator and provides improved C/N levels to the receiver message demodulator. In order to provide improved extension, Scientific-Atlanta uses a patented system (Patent No. 3,217,257 with others pending). The unit may be operated in two modes (IN-OUT). With the control switch to the IN position, the unit functions under the control of the receiver AGC signal, which drives a comparator circuit. The comparator output sets

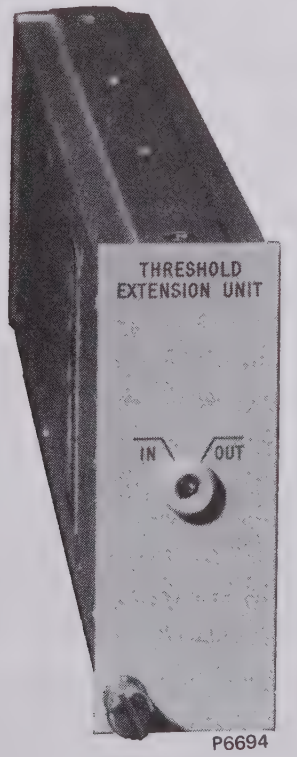

Figure 21A-1 Threshold Extension Unit--Part No. 201880

internal gains to provide the desired operating characteristics in the low C/N region to provide extension. At high C/N's, the unit operates as an extension of the limiting circuits in the receiver system. It should be noted that, if operation at C/N values above 20 dB is used, the unit should be replaced with a jumper module to insure optimum system performance.

Twenty plug-in loop filter boards (part numbers 202820 through 202839) are available for the TEU. The channel capacity of each loop filter is indicated on the board.

21A.1.1 Technical Characteristics

Characteristic	Specification
IF Center Frequency	70 MHz
Return Loss (75 ohms)	
Input (70 ±10 MHz)	>20 dB
Output (70 ±10 MHz)	>20 dB
IF Limiting (Nominal)	>10 dB
Baseband Flatness Degradation	>0.5 dB
Receive Channel Capacity	Determined by the loop filter board installed (see figure 21A-8)

Data on extension is determined by the modulation format and the IF bandwidth. Specific operating performance can be supplied for the particular operating conditions.

21A.1.2 Construction

The active circuits of the threshold extension unit are contained on two circuit boards (A1 and A2 in figure 21A-5). The loop low-pass filter board (A2) plugs into the main assembly board (A1) which is attached to the left side of the module. A mode selector switch is mounted on the front panel. The coaxial delay lines required for the unit are attached to the main assembly and are mounted to the top or right-hand cover of the unit. Input and output connections to the unit are provided by a connector on the rear panel of the unit.

21A.1.3 Circuit Description

Figure 21A-2 is a block diagram of the TEU. The basic principal of operation is based on the fact that noise is random regardless of what operation is performed on it. It may also be stated that, for the case in point, the power spectrum is flat. The extension is obtained with the knowledge that the desired signal in a narrow bandwidth is higher in power than the noise. By properly applying this signal to an oscillator circuit, which has the ability to phase lock to the signal but not to the noise power available, extension can be obtained. Operation over a wide bandwidth can only be obtained by the application of center frequency control or steering of the oscillator center frequency by Scientific-Atlanta's patented method. This steering assures that the oscillator center frequency is close enough to the desired signal to allow phase tracking to take place with a minimum of noise contribution, thus producing an improvement in C/N in the signal provided to the demodulator.

The paragraphs that follow are referenced to figures 21A-6 through 21A-8.

The input signal to the unit is fed through an input pad to an isolation amplifier, which may be operated at two gain levels. This amplifier is made up of Q1, Q2, and associated components. The gain of the amplifier is set by potentiometer R6 when the unit is operating in the low gain mode (threshold extension region). When the unit is driven with a high C/N signal (which is determined by the AGC signal), a current is driven through CR1 and the amplifier gain is determined by R6 in parallel with R8. In this mode of operation, noise reduction is not required and the oscillator loop is opened. The input level is increased to insure that the signal will not be degraded in the TEU circuits.

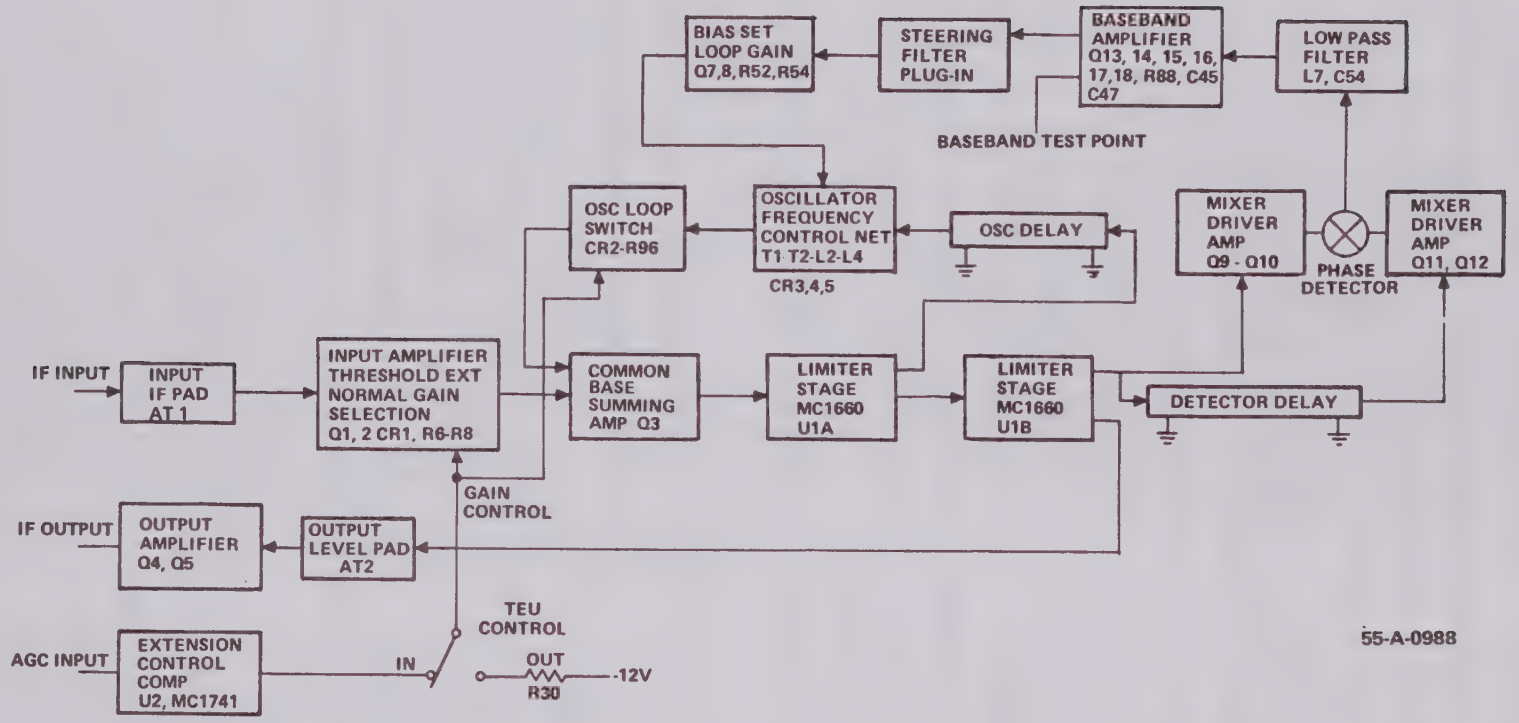

Figure 21A-2. Model C Threshold Extension Unit Block Diagram

The limiter circuit is made up of Q3. U1A, and the feedback circuits (Oscillator Frequency Control Network) made up of T1, T2, L2, L4 and varactor diodes CR3, CR4 and CR5. Common base amplifier Q3 provides a low input impedance, which allows the summing of the input signal and the feedback signal to take place with a minimum of interaction other than the desired injection locking action. The delay line is used in the circuit to provide the required phase relations for circuit operation. U1A has two output circuits, one of which is used to drive the feedback network. The other output is used to drive an additional limiter stage (U1B), which is equipped with two output circuits. The signals at these points are 70 MHz square waves. One signal is used to drive the internal frequency discriminator, and the other is attenuated and amplified to drive the output load.

The frequency discriminator is a delay line unit that uses a phase detector as the detector element. The operation is based on the fact that as the frequency is varied at the input of a delay line of fixed length, the signal will be delayed a fixed amount, but the phase of the output relative to the input will now vary with frequency. The delay line input and output signals are amplified and applied to a doubly balanced mixer, which provides the desired phase detection function. The reference or non-delayed signal is amplified by a differential amplifier made up of Q9 and Q10. The delayed signal is amplified by Q11 and Q12 and drives the remaining input port of the mixer. The phasing of the system is such that when the input signal is at 70 MHz, the phase detector output voltage is at or near zero volts and is positive for positive frequency shift and negative for negative frequency shift. The signal is low-pass filtered by L7 and C54 to remove any residual 70 MHz and harmonics thereof from the output. The signal now contains the information as to the amount of frequency offset required to tune or position the oscillator center frequency for optimum threshold extension.

The baseband signal is fed to the input of a wideband amplifier made up of Q13, Q14, Q15, Q16, Q17, and Q18. The amplifier provides most of the gain required to drive the oscillator tuning network. The low impedance output of the amplifier is used to drive the steering low-pass (loop) filter. The output of the plug-in steering filter is fed to the bias and loop gain setting circuits made up of Q7 and Q8 with potentiometers R52 and R54. R54 is used to set the nominal operating bias of the tuned circuits and R52 provides the loop gain adjustment to optimize the loop performance. R54 is used to set the center frequency of the oscillating limiter.

The limiter circuit is operated in the linear mode which is set up by the network made up of R15, R17, R38 and associated decoupling capacitors. This network allows the adjustment of limiter symmetry to provide the best possible NPR performance in the lower channel slots.

21A.1.4 Installation and Operation

The threshold extension unit is designed to operate in Scientific-Atlanta's Series 411 Receiver system between the IF amplifier output and the wideband demodulator. This is shown as configuration E in the mainframe section of the receiver manual. All required signal connections are provided by the unit connector.

For best operation, TEU performance should be checked with a noise load set and the symmetry adjusted for best performance in the bottom slot (16 kHz). Noise performance of the demodulator in the bottom slot is very critical and the TEU should be adjusted with the demodulator that it is to be operated with. A hole is provided in the top cover of the unit so this adjustment may be made with the unit operating on the extender module assembly. Refer to the noise load test setup (figure 21A-3) for proper receiver setup before making any adjustment. (Note that the full CW position of the adjustment will disable the limiter, and a drop in receiver noise power will be noted.) In a properly adjusted unit, the NPR will be maximum at some setting prior to the full CW position. Replace the unit in the operating position in the receiver and secure with the front-panel screw. The mode selector switch should be set to the IN position so that automatic selection of TEU operation will take place when the C/N ratio in the IF channel drops below 12 ±1 dB.

21A.1.5 Changing Channel Capacity

a. Install the loop filter for the Channel capacity of the system to be served.

b. Install AT1 as shown from the kit 201889 provided.

NO. CHANNEL	AT1 VALUE
12	22 dB
24-36	18 dB
48-192	12 dB
252-432	9 dB

c. Switch the TEU out and set R15 for the best clean carrier NPR in the low slot.

d. Alternately adjust R8 and R15 for the best clean carrier NPR in the low slot.

e. Switch the TEU to in - Connect the TEU output to a counter or spectrum analyzer and adjust L2 and L4 (keep both cores at approximately the same depth in the coil form) to produce an output of 70 MHz $\pm$20 kHz.

f. Add noise loading until the operating point is beyond threshhold and set R6 for the best NPR in the low slot.

Note

Adjusting R6 through its entire range should cause a definite dip in NPR with a measurable decrease in NPR at the extremes of the controls range. If this indication is not produced by running R6 through the range, an AT1 of higher (or lower) value should be installed and R6 run through the range until an NPR "V" is experienced to indicate the proper AT1 value has been established.

g. Make a final fine adjustment to the loaded NPR in the low slot with L2 and L4.

h. The unit should now meet the requirements for:

1. Clean carrier with the TEU "out"
*2. 8,000 + 200 NPR with the TEU "in"
*3. 50,000 NPR with the TEU "in"

i. Measure Baseband Flatness - Adjust R52 to correct any baseband slope introduced by the TEU.

*These requirements may be 0.5 dB worse if the unit is above threshold.

21A.2 MAINTENANCE

Refer to the receiver mainframe manual, section 5, for general maintenance information. Use a module extender to operate the threshold extension unit module from the receiver slot during maintenance and adjustment.

21A.2.1 Access to Circuit Boards

a. Remove the right cover by removing the short screws from top and bottom edges and the longer screws from the sides of the module. Raise the cover and fold the cover toward the bottom of the unit. This is required since the delay cables are mounted to the top cover.

b. If component replacement is required, the remaining panel mounting and board mounting screws must be removed.

21A.2.2 Removal and Replacement of Plug-In Loop Filter Board

The loop filter board may be changed by lifting the unit out by hand being careful not to bend or damage the mounting posts. The board is marked with the channel capacity in ink.

21A.2.3 Alignment and Performance Testing

Before any alignment and performance testing can be performed on the unit, the equipment as shown in figure 21A-3, or its equivalent, must be set up. The test setup must supply a wideband IF noise source that can be summed with a distortion-free, noise-loaded, frequency-modulated pre-emphasis signal. The test set must use the required band limiting filters at IF and baseband required for the channel capacity. The de-emphasis network shown in figure 21A-3 may be included in the receiver or provided as an external network. The noise load test set receiver must be equipped with a minimum of the top slot and bottom slot for the loading used.

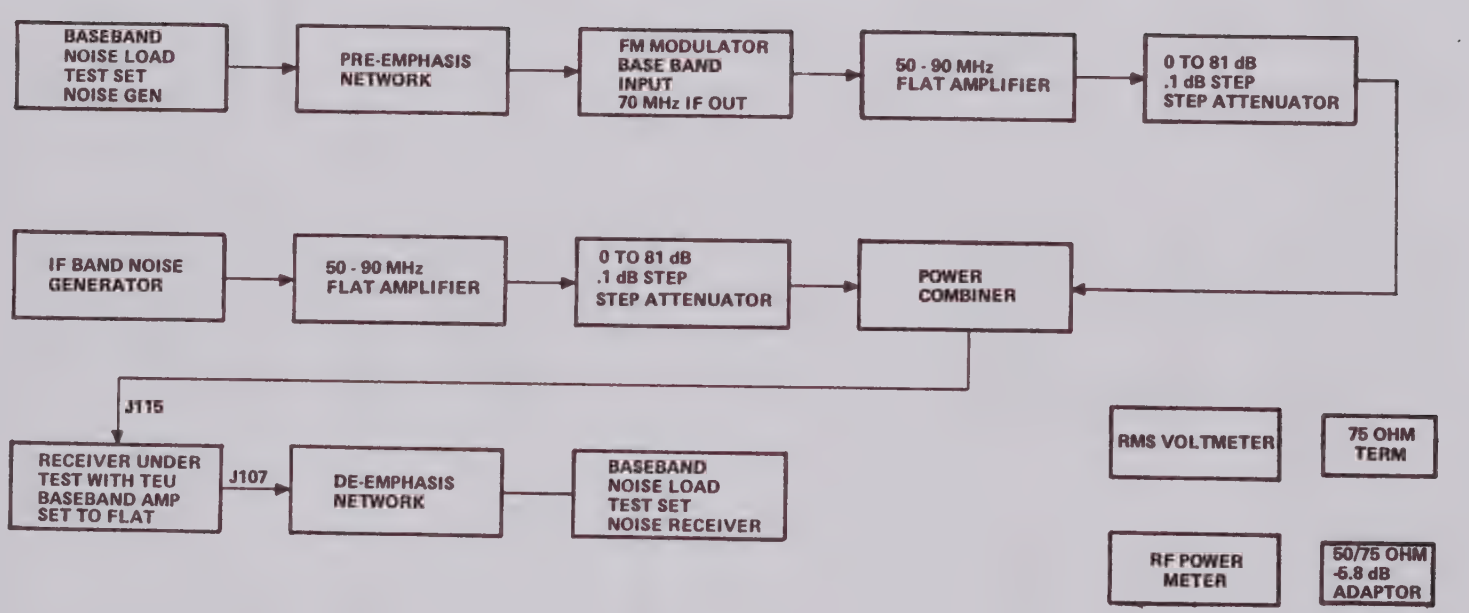

Figure 21A-3. C/T - C/N Noise NPR Test Setup

A baseband rms voltmeter and an RF power meter are required with the necessary terminations and adaptors for setting the system power levels. The test setup shown in figure 21A-3 is to be used at the IF interface into the IF filter of the receiver. The receiver IF chain is looped through the back panel with the input connector to the IF filter being J115. See section 4 of the receiver mainframe manual for signal flow and level distribution.

21A.2.3.1 C/T Setup. The test setup in figure 21A-3 should be set up to provide noise power levels and signal levels in the range of -40 to -45 dBm. This level will insure clean carrier S/N measurement and minimum contribution of circuit noise when making threshold measurements. If the IF noise generator is provided with an IF filter of known noise bandwidth, it can be calibrated to provide the correct C/T signal levels. In any event, the unit should be provided with a filter to limit the noise bandwidth so that the maximum signal plus noise power into the receiver does not exceed the level shown in section 4 of the receiver mainframe manual (figure 4-2). The amplifiers used in the noise test setup for IF noise amplification should be operating at a power level at least 6 dB below the 0.1 dB compression point. When setting up the noise test set, use test procedure 132323 found in the receiver mainframe section of the manual. The block diagram in test procedure 132323 shows an upconverter translator that can be used, but is not required. If the IF filter to be used in the receiver has a known noise bandwidth, the C/T system calibration can be done using the IF filter. The equation for calculating C/T is found in test procedure 132323.

21A.2.3.2 Module Adjustment. The unit adjustment is accomplished by following the steps listed below. An operating, factory-adjusted unit with no electrical problems is assumed. The input and output return loss adjustments have been set at the factory and should not require any field adjustment. Do not adjust C2 or C34. The location of adjustable components is shown in figure 2 of Scientific-Atlanta test procedure number 200168, which is reproduced on the pages following this section. Table 21A-1 provides the Intelsat performance requirements for all channel capacities.

a. Preparation. Connect the unit to the receiver with a 411/461 extender module (Part No. 131889). Make sure that the IF amplifier is operating in the AGC mode and that the C/T test setup is operating and has been properly calibrated. The test system must be set for the proper noise loading and deviations for the operating channel capacity. For Scientific-Atlanta equipment, all the required information can be found in test procedure 132323 of the receiver mainframe manual.

b. C/N Switch Setpoint. Check the C/N switch setpoint by monitoring the voltage at U2 pin 6. With the test set adjusted to provide a 12 dB IF C/N reading on the receiver C/N meter, the level at pin 6 should be greater than +9V dc. Adjust the test set to provide a C/N of 12.5 dB. The voltage at U2 pin 6 should now switch negative to less than -9V dc. If this is not the case, adjust R27, the C/N switch point control, until the unit switches from positive to negative when the C/N is changed from 12 to 12.5 dB.

c. Center Frequency Adjustment. This adjustment has been factory set to provide 4.5V dc at the junction of CR3, CR4 and CR5, and should not require field adjustment. If it does require adjustment, connect a frequency counter to the junction of R29 and C41. Set R54 for 4.5 volts measured at the junction of R41 and L3. Adjust L2 and L4 with the IF amplifier removed from the receiver and the mode selector switch set to the IN position for a frequency counter reading of 70 ±0.05 MHz. (Removing the IF filter removes the AGC signal and the RF signal to the unit and allows it to operate as an oscillator when switched to IN.

As a test, switch the unit to the OUT position and the counter should read zero. Make sure that the counter sensitivity is such that it will not read on the noise level present at the measurement point.

d. Symmetry Adjustment. In order to provide the best possible NPR's with the unit operating above the 12.5-dB C/N levels in the lowest slots, the symmetry needs to be adjusted with the demodulator that the unit is going to work with. With the mode selector switched to the OUT position, and with the receiver operating under AGC control with a C/N of 10 dB, set the NPR measuring set for the 16-kHz slot measurement. Adjust R15 for the highest NPR reading. Note discussion in paragraph 21A.1.5.

e. Loop Gain and Drive Level Adjustments. Set the C/N at 5 dB using the noise test setup attenuators. Switch the mode selector to the IN position. Set the extension mode drive level control (R6) to the full CCW position. Slowly adjust the loop gain control potentiometer for the lowest NPR. Rotate the extension mode drive level control slowly CW until the NPR just starts to drop. Note that these controls require a minimum of four turns and do not have positive stops.

f. No Extension Mode Drive Level Adjustment. Set the NPR test set to observe the top slot for the channel loading being tested. Set the C/N at 10 dB with the mode selector in the OUT position. Adjust R8 from the full CW position to the full CCW position noting the NPR reading, then set R8 for maximum NPR. In units operating at the higher channel capacity, the full CCW position will generally be required. It is not uncommon for this control to have very little effect in some units, and if this is the case, set R8 to the full CCW position.

Scientific-Atlanta Test Procedure No. 200168 is reproduced on the following pages.

TABLE 21A-1. INTELSAT PERFORMANCE REQUIREMENTS

SCIENTIFIC-ATLANTA MESSAGE DATA CHART (2-84)

Channel Capacity	BW (MHz)	Top BB Freq. (kHz)	Test Tone Freq. (kHz)	Noise Load Ratio (dB)	RMS Test Dev. (kHz)	RMS MC Dev. (kHz)	Level Into SA Mod (140 kHz/-40 dBm) TT Dev. (dBm)	RMS Dev. (dBm)	1st Car. Null @ TT Freq.	S/N = NPR + (dB)	RX Max Sig. Level (dBm)	8000 pWpo C/T	NPR 8000 pWpo	50,000 pWpo C/T	NPR 50,000 pWpo
12	1.25	60	36.48	3.32	109	159	-42.17	-38.85	-47.07	8.57	-47	-154.7	39.90	-160.7	31.94
24	2.5	108	65.66	+4.52	164	275	-38.63	-34.11	-41.96	10.39	-45	-153.0	38.11	-159.0	30.11
36	2.5	156	94.85	+5.23	168	307	-38.42	-33.18	-38.77	11.44	-45	-150.0	37.06	-156.0	29.06
48	2.5	204	124.00	5.72	151	292	-39.34	-33.61	-36.44	12.19	-45	-146.7	36.27	-152.7	28.32
60	2.5	252	153.2	6.11	136	276	-40.25	-34.14	-34.61	12.78	-45	-144.0	35.72	-150.0	27.72
60	5.0	252	153.2	6.11	270	546	-34.30	-28.19	-34.61	12.78	-42	-149.9	35.72	-155.9	27.72
72	2.5	300	182.4	6.43	125	261	-40.98	-34.55	-33.09	13.25	-45	-141.7	35.25	-147.7	27.25
72	5.0	300	182.4	6.43	294	616	-33.56	-27.12	-33.09	13.25	-42	-149.1	35.25	-155.1	27.25
96	5.0	408	248.1	6.93	263	584	-34.52	-27.59	-30.42	14.13	-42	-145.5	34.37	-151.5	26.37
96	7.5	408	248.1	6.93	360	799	-31.80	-24.87	-30.42	14.13	-40	-148.2	34.37	-154.2	26.37
132	5.0	552	335.6	7.48	223	529	-35.96	-28.48	-27.79	14.93	-42	-141.4	33.57	-147.4	25.57
132	7.5	552	335.6	7.48	376	891	-31.42	-23.94	-27.79	14.93	-40	-145.9	33.57	-151.9	25.57
132	10.0	552	335.6	7.48	430	1020	-30.25	-22.77	-27.79	14.93	-39	-147.1	33.57	-153.1	25.57
192	5.0	804	488.8	8.13	180	459	-37.82	-29.69	-24.53	15.94	-42	-136.3	32.56	-142.3	24.56
192	7.5	804	488.8	8.13	297	758	-33.47	-25.34	-24.53	15.94	-40	-140.6	32.56	-146.6	24.56
192	10.0	804	488.8	8.13	457	1167	-29.72	-21.59	-24.53	15.94	-39	-144.4	32.56	-150.4	24.56
252	7.5	1052	639.6	9.01	260	733	-34.62	-25.61	-22.19	16.25	-40	-137.1	32.25	-143.1	24.25
252	10.0	1052	639.6	9.01	358	1009	-31.84	-22.83	-22.19	16.25	-39	-139.9	32.25	-145.9	24.25
252	15	1052	639.6	9.01	577	1627	-27.70	-18.69	-22.19	16.25	-37	-144.1	32.25	-150.1	24.25
312	10	1300	790.4	9.94	320	1005	-32.82	-22.88	-20.35	16.25	-39	-137.1	32.25	-143.1	24.25
312	15	1300	790.4	9.94	546	1716	-28.17	-18.23	-20.35	16.25	-36	-141.7	32.25	-147.7	24.25
372	15	1548	941	10.71	480	1645	-29.30	-18.59	-18.84	16.25	-36	-138.9	32.25	-144.9	24.25
432	15	1796	1092	11.35	401	1479	-30.86	-19.51	-17.55	16.25	-37	-136.2	32.25	-142.2	24.25
432	17.5	1796	1092	11.35	517	1919	-28.65	-17.30	-17.55	16.25	-37	-138.5	32.25	-144.5	24.25
432	20	1796	1092	11.35	616	2276	-27.13	-15.78	-17.55	16.25	-36	-139.9	32.25	-145.9	24.25
432	25	1796	1092	11.35	729	2688	-25.67	-14.32	-17.55	16.25	-35	-141.4	32.25	-147.4	24.25
492	20	2044	1243	11.92	558	2200	-27.99	-16.07	-16.42	16.25	-36	-137.8	32.25	-143.8	24.25
492	25	2044	1243	11.92	738	2911	-25.56	-13.64	-16.42	16.25	-35	-140.3	32.25	-146.3	24.25
552	20	2292	1394	12.42	508	2121	-28.81	-16.39	-15.43	16.25	-36	-136.0	32.25	-142.0	24.25
552	25	2292	1394	12.42	678	2833	-26.30	-33.88	-15.43	16.25	-35	-138.5	32.25	-144.5	24.25
612	20	2540	1544	12.87	454	1996	-29.78	-16.91	-14.54	16.25	-36	-134.2	32.25	-140.2	24.25
792	20	3284	1997	13.99	356	1784	-31.89	-17.90	-12.30	16.24	-36	-129.9	32.26	-135.9	24.26
792	25	3284	1997	13.99	499	2494	-28.96	-14.97	-12.30	16.24	-35	-132.8	32.26	-138.8	24.26
972	25	4028	2449	14.88	410	2274	-30.67	-15.79	-10.53	16.24	-35	-129.4	32.26	-135.4	24.26
972	36	4028	2449	14.88	802	4417	-24.84	-9.96	-10.53	16.24	-34	-135.2	32.26	-141.7	24.26
1092	36	4892	2974	15.38	701	4118	-26.01	-10.62	-8.84	16.59	-34	-132.4	31.91	-138.4	23.91
1332	36	5884	3577	16.25	591	3834	-27.49	-11.24	-7.24	16.52	-34	-129.3	31.98	-135.3	23.98
1872	36	8120	4937	17.72	419	3181	-30.48	-12.75	-4.44	16.46	-34	-123.5	32.04	-129.5	24.04

THIS PAGE LEFT BLANK INTENTIONALLY

21A.2.4 Troubleshooting Aids

Tables 21A-2 and 21A-3 contain nominal dc operating voltages that are found in an operational unit. The nominal power supply drain is 180 mA for the +12V supply and 210 mA for the -12V supply.

TABLE 21A-2. TRANSISTOR OPERATING VOLTAGES*

Transistor	E	B	C
Q1	0	0.7	6.0
Q2	5.2	6.0	10.9
Q3	-0.7	0	7.0
Q4	4.7	5.6	12.0
Q5	0	0.7	5.5
Q6	-5.3	-6.0	-9.5
Q7	4.6	3.9	0
Q8	-0.7	0	3.9
Q9	-0.8	-0.1	6.0
Q10	-0.7	0	4.5
Q11	-0.7	0	4.5
Q12	-0.7	-0.1	5.8
Q13	0	0.7	10.7
Q14	7.5	7.2	0.7
Q15	-0.7	0	5.5
Q16	-0.8	.05	7.2
Q17	-5.8	-5.1	-1.8
Q18	-8.2	-7.6	0

TABLE 21A-3. INTEGRATED CIRCUIT OPERATING VOLTAGES*

Pin	1	2	3	4	5	6	7	8	9	10	11	12	13	14	15	16
U1	0	-1.8	-1.8	-5.2	-5.2	-5.2	-1.4	-5.2	0	-5.2	-5.2	-5.2	-1.8	-1.8	-1.8	0
U2	-12	0	0 to 2	-12	-12	-10 to +10	+12	0	X	X	X	X	X	X	X	X

*Voltages within 10% of those listed are acceptable.

APPLICATION		REVISIONS			
NEXT ASSY	USED ON	SYM	DESCRIPTION	DATE	APPROVED
141423/201880	411	A	CHGED 5.3 FIRST PARAGRAPH WORDING. 1.0KHZ WAS 1000KHZ ON 5.5. ≥ 50 WAS ≥ 100 ON 5.6. 80-100MV WAS 200MV ON 5.7. PER ECR 3298 [illegible]	6-2-83	[illegible]
		B	SEE ECR FOR CHGS. ECR 4528 RT 7-18-84 [illegible] 7-20-84	7-20-84	BM

REV																								
SHEET																								
REV STATUS OF SHEETS	REV	B	-	-	-	B	-	-	B	B	B	B	B	-	-									
	SHEET	1	2	3	4	5	6	7	8	9	10	11	12	13	14									

ALL DIMENSIONS ARE IN INCHES UNLESS OTHERWISE SPECIFIED

TOLERANCES
3 PLACE DECIMALS ±.005
2 PLACE DECIMALS ±.02
1 PLACE DECIMAL ±.1

FRACTIONS ± ANGLES ±0°30'

MAX SURFACE ROUGHNESS 125 ✓
ALL MACHINED SURFACES EXCEPT AS NOTED

BREAK SHARP EDGES AND CORNERS .010 MAX

FINISH

CONTRACT NO.

DWN	Evelyn Smith	1/22/79
ENGR	W P Owerst	2/1/79
CHK	M Lichnor	2/1/79
PROD	Charles Osborne	14 Oct 83
APVD		
APVD		

Scientific-Atlanta, Inc.

3845 Pleasantdale Road, Atlanta, Georgia 30340

PROCEDURE, MANUFACTURING TEST
THRESHOLD EXTENSION UNIT (TEU)
MODEL C PART NO. 141423/201880

SIZE	CODE IDENT NO.	DRAWING NO.
A	10110	200168

SCALE | REV B | SHEET 1 of 14

SA434-871

F

1.0 SCOPE

The purpose of this procedure is the alignment and performance testing of the Model C TEU, part number 141423/201880. The theory of operation of the unit is described in publication number 25R232Z (section 21A in the Series 411 Receiver manual). The technician should also refer to test procedure number 132323, which details the test setup for Series 411 WB NPR testing.

A block diagram of the Model C TEU is shown in figure 1.

2.0 APPLICABLE DOCUMENTS

Top Assembly	201880
Model C TEU PWB Assembly	201891
Model C TEU PWB Schematic	201892
Loop Filter PWB Assembly	202820-202839
Loop Filter PWB Schematic Diagram	201896
Series 411 NPR Test Procedure	132323

3.0 TEST EQUIPMENT REQUIRED

The following test equipment, or equivalent, is required for checkout of the Model C TEU.

Item	Manufacturer/Model No.
Power Adaptor	S-A/Part No. 131889
Power Supply	Provided in 411 Receiver
DVM or VOM	General Purpose
Frequency Counter	
CW Generator	
Test Oscillator	Hewlett-Packard/651
Oscilloscope	
Microwave Link Analyzer	Hewlett-Packard/3710A, 3702B, 3703A

Noise Equipment

White Noise Receiver	Wandel & Goltermann/RE-50
White Noise Generator	Wandel & Goltermann/RS-50
or	
Noise Receiver	Marconi/TF2092B14
Noise Generator	Marconi/TF2091B

	SIZE A	CODE IDENT NO. 10110	DRAWING NO. 200168
	SCALE	REV B	SHEET 3 of 14

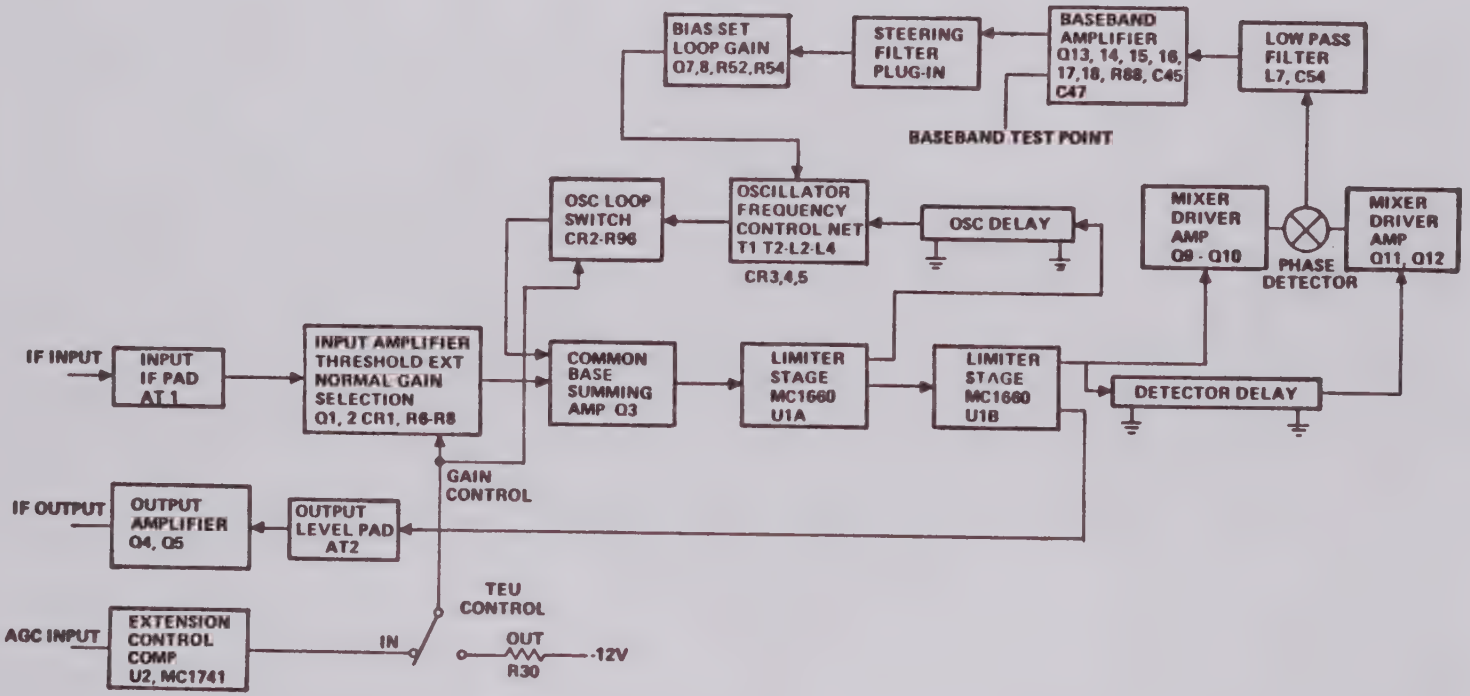

Figure 1. Model C TEU Block Diagram

SIZE	CODE IDENT NO.	DRAWING NO.
A	10110	200168

SCALE

REV B

SHEET 4 of 14

4.0 INSPECTION AND SETUP

Before applying power to the unit, check the unit for proper wiring and coax cable continuity.

Apply DC power to the unit using adaptor S-A 131889. Check the unit for the correct DC operating voltages (+12V DC, -12V DC).

5.0 ALIGNMENT AND TESTING

5.1 General

The DC operating voltages in tables 1 and 2 are provided to facilitate troubleshooting. Figure 2 shows the location of the adjustable components on the TEU printed-wiring board.

5.2 Video Amplifier DC Balance Adjustment

Remove the loop filter board, connect a voltmeter to J2, and adjust R88 for zero volts. If the potentiometer will not adjust to zero, the unit must be within $\pm$0.5 volts of zero to ship. Units that will not adjust to within 0.5 volts of ground must be repaired.

5.3 Oscillator Center Frequency Adjustment

Switch the TEU to the IN position. Adjust R54 for +4.5 $\pm$0.01 volts at the junction of R41 and L3. Adjust R15 fully CCW.

Check the voltage at U2 pin 6. If this voltage is not greater than +9 volts, adjust R27 until that positive voltage reading is obtained. Check the junction of CR1 and R14 for the same voltage as read at U2 pin 6. Check the voltage at the junction of R96 and CR2. This voltage should be one diode drop positive.

Connect the counter to the TEU IF output. Remove the IF input to the TEU. Adjust L2 and L4 for the same slug depth in the form and for a counter reading of 70.00 MHz. Switch the mode selector switch to OUT. The oscillator should stop, and the

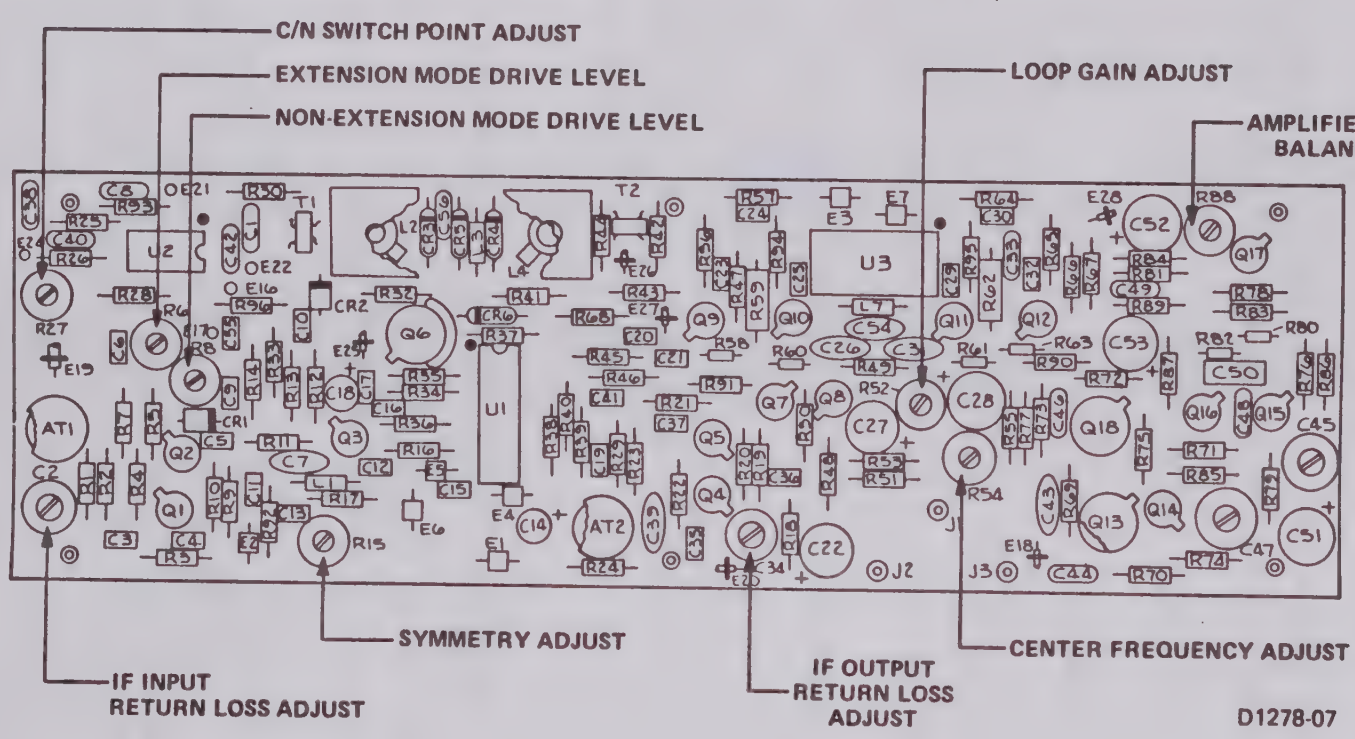

Figure 2. Adjustment Locator

TABLE 3. ATI VALUE PER CHANNEL CAPACITY

NO. CH	ATI VALUE
12	22 dB
24 - 36	18 dB
48 - 192	12 dB
252 - 432	9 dB

TABLE 1. TRANSISTOR OPERATING VOLTAGES*

Transistor	E	B	C
Q1	0	0.7	6.0
Q2	5.2	6.0	10.9
Q3	-0.7	0	7.0
Q4	4.7	5.6	12.0
Q5	0	0.7	5.5
Q6	-5.3	-6.0	-9.5
Q7	4.6	3.9	0
Q8	-0.7	0	3.9
Q9	-0.8	-0.1	6.0
Q10	-0.7	0	4.5
Q11	-0.7	0	4.5
Q12	-0.7	-0.1	5.8
Q13	0	0.7	10.7
Q14	7.5	7.2	0.7
Q15	-0.7	0	5.5
Q16	-0.8	.05	7.2
Q17	-5.8	-5.1	-1.8
Q18	-8.2	-7.6	0

TABLE 2. INTEGRATED CIRCUIT OPERATING VOLTAGES*

Pin	1	2	3	4	5	6	7	8	9	10	11	12	13	14	15	16
U1	0	-1.8	-1.8	-5.2	-5.2	-5.2	-1.4	-5.2	0	-5.2	-5.2	-5.2	-1.8	-1.8	-1.8	0
U2	-12	0	0 to 2	-12	-12	-10 to +10	+12	0	X	X	X	X	X	X	X	X

*Voltages within 10% of those listed are acceptable.

SIZE	CODE IDENT NO.	DRAWING NO.
A	10110	200168
SCALE	REV B	SHEET 8 of 14

voltage at the junction of CR2 and R96 should be -12V. Check the voltage at the junction of CR1 and R14; it should be one diode drop negative.

5.4 Demodulator Test

Install a 9 dB attenuator in XAT1 on the TEU board and set R8 to the full counter clockwise position. Adjust the CW generator for an output level of -5 dBm (75 ohms) and a frequency of 60 MHz. Connect the generator output to the TEU IF input, and measure the DC voltage at the junction of L7 and C54. Record this voltage on the data sheet. Measure and record the DC voltages at the same point with generator frequencies of 65 MHz, 70 MHz, 75 MHz and 80 MHz. These measurements are made for use as references in case troubleshooting is necessary; there are no specific requirements.

5.5 Loop Gain and Oscillator Control Test

Remove the input signal from the TEU, and switch the TEU mode selector to IN. Set up the H-P/651 (or equal 50 ohm output) test oscillator for an output level of 1.0V p-p (open circuit voltage) at 1.0 kHz. Connect the generator output to J3 on the TEU printed-wiring board. With the oscilloscope probe connected to the junction of R41 and L3, adjust R52 for a 2.0V p-p level. After setting R52, check the voltage at the positive lead of C27. The voltage here should be $\geq$ +5.5V.

5.6 Demodulator Sensitivity Check

With the input at J3 remaining as described above, measure the peak-to-peak voltage at the junction of L7 and C54. This voltage should be recorded on the Test Data Sheet.

5.7 Baseband Amplifier Gain Check

Readjust the HP/651 for an output level of 100 mV p-p, still at 1000 kHz. Connect the oscilloscope probe to J2, and adjust

control setting in the highest slot for the capacity being tested if the NPR's in the top slot can be improved by resetting R8. Use the setting which gives the best NPR's in the top slot.

e. Check the baseband response of the TEU across the assigned channel frequency operating at the 8,000 PW C/T level. The unit should not produce more than 0.5 dB degradation in flatness. (Reduce the C/N meter reading with the AGC amp zero on noise control if necessary to assure that the unit is switched "IN" for this test.)

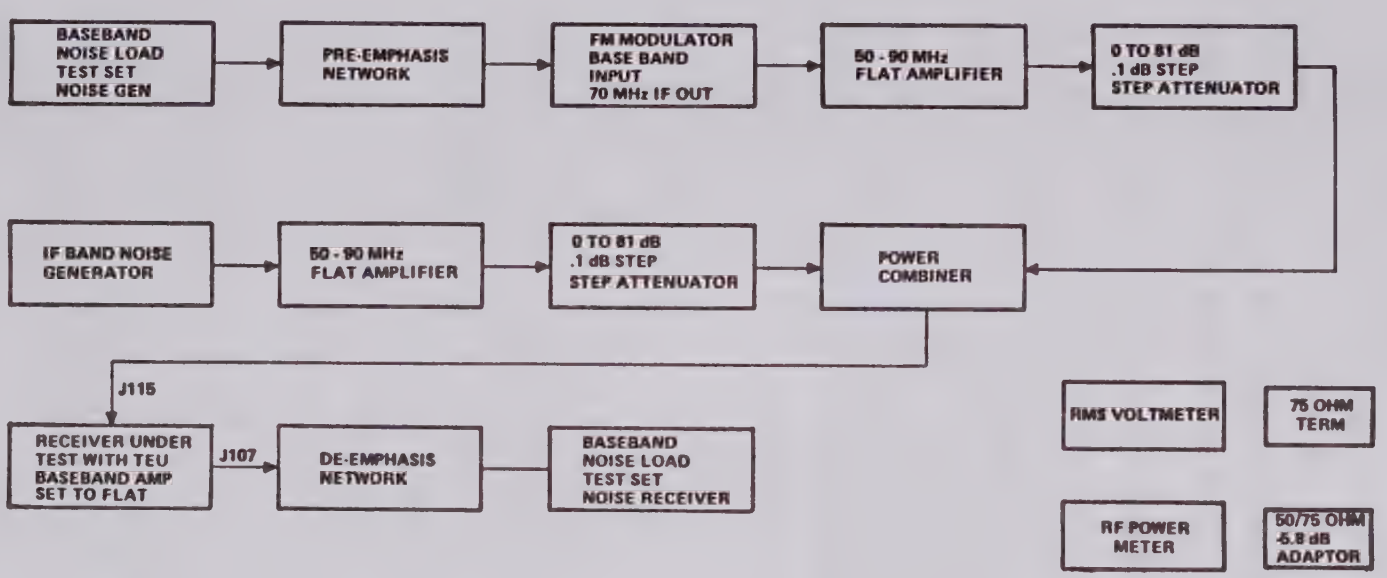

Figure 3. C/T - C/N Noise-NPR Test Setup

SIZE A | CODE IDENT NO. 10110 | DRAWING NO. 200168 | SCALE | REV B | SHEET 13 of 14

PARTS LISTS

ASSEMBLY 201880 TEU MODULE ASSY MODEL C

REF DESIG	PART NO.	ENRV	DESCRIPTION	VENDOR	VENDOR PART NUMBER	QTY	FSCM CODE
	0201892	E	SCHEMATIC,TEU,MODEL,C			.	
001	0127195	D	CHASSIS			1.	
002	0201884	B	COVER CHASSIS TEU MODEL C			1.	
003	0090724	E	REAR PANEL,SINGLE WIDTH LWR DECK MODULE			1.	
004	0131722		PANEL FRONT THRESHOLD EXTENSION			1.	
005	0078535		CONN CONTACT FEMALE CRIMP NO. 24 WIRE	BDW	RC24M-9	4.	09922
006	0081155		NUT ESNA 4-40 MINI HEX INSRT BRSS CD PLT	ES	92-1660-40	2.	72962
007	0078985		SCREW 2-56 X 3/16 F HD,100 DEG,SST	XZ	BY DESCRIPTION	6.	
008	0079007		SCREW 4-40 X 1/8 F HD,100 DEG,SST	XZ	BY DESCRIPTION	8.	
009	0078988		SCREW 4-40 X 3/16 F HD,100 DEG,SST	XZ	PER MS24693-C1	12.	
010	0057444		NUT CLAMPING 1/4-32 THD	SA	57444	1.	10110
011	0080605		WASHER 1/4 LOCK, INT TOOTH, NI PLT STL	AB	M4748	1.	01121
012	0129988		SLEEVE 1/2 DIA SWITCH MTG USE WITH 57444			1.	
013	0078531		CONN RECT BODY W/O CONTACTS 20 POS PLUG	BDW	MS20PM-61	1.	09922
014	0201882		RETAINER DELAY LINE OSCILLATOR			1.	
015	0201883		RETAINER DELAY LINE DEMOD			1.	
016	0081977		CORE BEAD FERRITE 7D .260X.125X.375L	STK	57-1555	2.	78488
017	0070744		CLAMP CABLE FOR 3/16 DIA CABLE NYLON	DAB	626	4.	25706
018	0076922		SPACER NO.4 ID 3/16 OD 1/8 L NI PLT BRS	FS	108100	4.	73734
019	0079827		SCREW 4-40 X 5/16 F HD,100 DEG,SST	XZ	PER MS24693-C3	4.	
020	0071494		NUT 4-40 UNC-2B,PLAIN-HEX,SST	XZ	PER MS35649-244	4.	
021	0073265		WASHER NO. 4 LOCK, EXT TOOTH, CAD PL STL	XZ	ANSI B18.21.1	4.	
022	0073406		WIRE 24 STRANDED BLACK	THM	PER MIL-W-16878D	.1	12515
023	0073408		WIRE 24 STRANDED RED	THM	PER MIL-W-16878D	.1	12515
024	0073413		WIRE 24 STRANDED VIOLET	THM	PER MIL-W-16878D	.1	12515
025	0073410		WIRE 24 STRANDED YELLOW	THM	PER MIL-W-16878D	.1	12515
026	0073414		WIRE 24 STRANDED GRAY	THM	PER MIL-W-16878D	.1	12515
027	0073412		WIRE 24 STRANDED BLUE	THM	PER MIL-W-16878D	.1	12515
028	0073415		WIRE 24 STRANDED WHITE	THM	PER MIL-W-16878D	.1	12515
029	0201897		TAG PATENT TEU			1.	
030	0153488	A	LABEL CHANNEL CAPACITY-FRONT PANEL MTG			1.	
031	0153342		LABEL CHANNEL CAPACITY INDICATING			1.	
032	0018141	C	LABEL 2 IN. BLANK			1.	
033	0261414		PAD KIT TEU			1.	
034	0077936		TUBING HEAT SHRINK .187ID SHRINKS TO.093	AW	FIT-221-3/16 BLACK	1.	92194
035	0073419		WIRE 24 STRANDED WHITE/RED	THM	PER MIL-W-16878D	1.	12515
036	0073419		WIRE 24 STRANDED WHITE/RED	THM	PER MIL-W-16878D	1.	12515
A 001	0201891	E	PRINTED WIRING BOARD ASSY TEU MODEL C			1.	
A 002	0201881		LIST,LOOP,FILTER,CHANNEL,SELECTION (SEE DRAWING 201896)			.	
CR001	0071122		DIODE 1N914 SIL 75V 75MA	SY	1N914	1.	80366
DL001	0201887	B	CABLE ASSY OSCILLATOR DELAY LINE			1.	
DL002	0201888	D	CABLE ASSY DEMOD DELAY LINE			1.	
R 001	0074702		RESISTOR 1.0K OHM 1/4W 5% COMP	AB	RCR07G102JS	1.	01121
S 001	0082829		SWITCH ROT 2P 2 POS NSH 1 SEC 60 DEG	RCL	SW 1891-1	1.	01686
W 001	0201886	A	CABLE ASSY IF OUTPUT			1.	
W 002	0078600		NOT ASSIGNED			.	
W 003	0078600		NOT ASSIGNED			.	
W 004	0201885	A	CABLE ASSY IF INPUT			1.	

PARTS LIST

ASSEMBLY 201891 MODEL C TEU PWB ASSEMBLY

ITEM	COMPONENT	DESCRIPTION	MFR	FSCM	MFR PART NUMBER
	0201892	SCHEMATIC DIAGRAM TEU MODEL C			
1	0201890	PRINTED WIRING BOARD TEU MODEL C			
2	0072879	STANDOFF 2-56 ID 1/8 HT SWAGE CD P BRSS	CTC	71279	350-2188-09-07-00
3	0123468	SHIELD CAN SMALL	JLO		PER SA DWG 123468
4	0079335	PAD TRANSSTR TO5 & TO18 TO TO5	THC	13103	7717-44-DAP
5	0078951	HEAT SINK CLIP ON FOR TO-5 TRANSISTOR	ASD		2201
AT1	0078700	FACTORY SELECTED VALUE			
AT2	0035878	ATTNUATR 9 DB FIXED T-PAD TO-5 CASE	NAM		KM3
C1	0080139	CAPACITR .1 MF 50V CER MONO	ER	72982	8131-050-651-104Z
C2	0083270	CAPACITR 1.7-11 PF AIR PC MT	J	74970	187-0106-005
C3	0081210	CAPACITR .01 MF 50V CER MONO X7R 10%	ER	72982	8121-050-X7R-103K
C4	0081210	CAPACITR .01 MF 50V CER MONO X7R 10%	ER	72982	8121-050-X7R-103K
C5	0081210	CAPACITR .01 MF 50V CER MONO X7R 10%	ER	72982	8121-050-X7R-103K
C6	0081210	CAPACITR .01 MF 50V CER MONO X7R 10%	ER	72982	8121-050-X7R-103K
C7	0078700	FACTORY SELECTED VALUE			
C8	0080139	CAPACITR .1 MF 50V CER MONO	ER	72982	8131-050-651-104Z
C9	0081210	CAPACITR .01 MF 50V CER MONO X7R 10%	ER	72982	8121-050-X7R-103K
C10	0081210	CAPACITR .01 MF 50V CER MONO X7R 10%	ER	72982	8121-050-X7R-103K
C11	0081210	CAPACITR .01 MF 50V CER MONO X7R 10%	ER	72982	8121-050-X7R-103K
C12	0081210	CAPACITR .01 MF 50V CER MONO X7R 10%	ER	72982	8121-050-X7R-103K
C13	0081210	CAPACITR .01 MF 50V CER MONO X7R 10%	ER	72982	8121-050-X7R-103K
C14	0080148	CAPACITR 10 MF 20V SOLID TANT POL 20%	KEM	80183	T362B106M020AS
C15	0081210	CAPACITR .01 MF 50V CER MONO X7R 10%	ER	72982	8121-050-X7R-103K
C16	0081210	CAPACITR .01 MF 50V CER MONO X7R 10%	ER	72982	8121-050-X7R-103K
C17	0081210	CAPACITR .01 MF 50V CER MONO X7R 10%	ER	72982	8121-050-X7R-103K
C18	0080148	CAPACITR 10 MF 20V SOLID TANT POL 20%	KEM	80183	T362B106M020AS
C19	0081210	CAPACITR .01 MF 50V CER MONO X7R 10%	ER	72982	8121-050-X7R-103K
C20	0081210	CAPACITR .01 MF 50V CER MONO X7R 10%	ER	72982	8121-050-X7R-103K
C21	0081210	CAPACITR .01 MF 50V CER MONO X7R 10%	ER	72982	8121-050-X7R-103K
C22	0082921	CAPACITR 150 MF 15V SOLID TANT POL 10%	KEM	05397	T362D157K015AS
C23	0081210	CAPACITR .01 MF 50V CER MONO X7R 10%	ER	72982	8121-050-X7R-103K
C24	0081210	CAPACITR .01 MF 50V CER MONO X7R 10%	ER	72982	8121-050-X7R-103K
C25	0081210	CAPACITR .01 MF 50V CER MONO X7R 10%	ER	72982	8121-050-X7R-103K
C26	0078600	NOT ASSIGNED			
C27	0035656	CAPACITR 100 MF 20V SOLID TANT POL 10%	KEM	05397	T362D107K020AS
C28	0035656	CAPACITR 100 MF 20V SOLID TANT POL 10%	KEM	05397	T362D107K020AS
C29	0081210	CAPACITR .01 MF 50V CER MONO X7R 10%	ER	72982	8121-050-X7R-103K
C30	0081210	CAPACITR .01 MF 50V CER MONO X7R 10%	ER	72982	8121-050-X7R-103K
C31	0078600	NOT ASSIGNED			
C32	0081210	CAPACITR .01 MF 50V CER MONO X7R 10%	ER	72982	8121-050-X7R-103K
C33	0080139	CAPACITR .1 MF 50V CER MONO	ER	72982	8131-050-651-104Z
C34	0083270	CAPACITR 1.7-11 PF AIR PC MT	J	74970	187-0106-005
C35	0081210	CAPACITR .01 MF 50V CER MONO X7R 10%	ER	72982	8121-050-X7R-103K

PARTS LIST

ASSEMBLY 201891 MODEL C TEU PWB ASSEMBLY - continued

ITEM	COMPONENT	DESCRIPTION	MFR	FSCM	MFR PART NUMBER
C36	0081210	CAPACITR .01 MF 50V CER MONO X7R 10%	ER	72982	8121-050-X7R-103K
C37	0081210	CAPACITR .01 MF 50V CER MONO X7R 10%	ER	72982	8121-050-X7R-103K
C38	0080139	CAPACITR .1 MF 50V CER MONO	ER	72982	8131-050-651-104Z
C39	0035761	CAPACITR 5 PF 500V CER DISC	ER	72982	831-COHO-509C
C40	0080139	CAPACITR .1 MF 50V CER MONO	ER	72982	8131-050-651-104Z
C41	0081210	CAPACITR .01 MF 50V CER MONO X7R 10%	ER	72982	8121-050-X7R-103K
C42	0080139	CAPACITR .1 MF 50V CER MONO	ER	72982	8131-050-651-104Z
C43	0082431	CAPACITR 22 PF 100V CER DISC	ERT	18796	835-024-COGO-220J
C44	0080139	CAPACITR .1 MF 50V CER MONO	ER	72982	8131-050-651-104Z
C45	0078976	CAPACITR 15-60 PF MIN CER DISC PC MT	ER	72982	538-011 F 15-60
C46	0080139	CAPACITR .1 MF 50V CER MONO	ER	72982	8131-050-651-104Z
C47	0078976	CAPACITR 15-60 PF MIN CER DISC PC MT	ER	72982	538-011 F 15-60
C48	0080139	CAPACITR .1 MF 50V CER MONO	ER	72982	8131-050-651-104Z
C49	0080139	CAPACITR .1 MF 50V CER MONO	ER	72982	8131-050-651-104Z
C50	0073498	CAPACITR 820 PF 500V SILVER MICA 5%	CD	14655	CD19FD821J03
C51	0035656	CAPACITR 100 MF 20V SOLID TANT POL 10%	KEM	05397	T362D107K020AS
C52	0035656	CAPACITR 100 MF 20V SOLID TANT POL 10%	KEM	05397	T362D107K020AS
C53	0082921	CAPACITR 150 MF 15V SOLID TANT POL 10%	KEM	05397	T362D157K015AS
C54	0082431	CAPACITR 22 PF 100V CER DISC	ERT	18796	835-024-COGO-220J
C55	0081210	CAPACITR .01 MF 50V CER MONO X7R 10%	ER	72982	8121-050-X7R-103K
C56	0078700	FACTORY SELECTED VALUE			
CR1	0081454	DIODE MPN3401 SWITCH VHF SIL PIN	MOS	04713	MPN3401
CR2	0081454	DIODE MPN3401 SWITCH VHF SIL PIN	MOS	04713	MPN3401
CR3	0085348	DIODE KV2103 VARACTOR SIL WIRE LEADS	KSW		KV2103
CR4	0085348	DIODE KV2103 VARACTOR SIL WIRE LEADS	KSW		KV2103
CR5	0085349	DIODE KV2803 VARACTOR SIL WIRE LEADS	KSW		KV2803
CR6	0071142	DIODE 1N4154 SIL 25V 150MA	SY	80368	1N4154
E1	0081718	CORE BEAD FERRITE 75 .138X.037X.150L	STK	78488	57-1413
E2	0081718	CORE BEAD FERRITE 75 .138X.037X.150L	STK	78488	57-1413
E3	0081718	CORE BEAD FERRITE 75 .138X.037X.150L	STK	78488	57-1413
E4	0081718	CORE BEAD FERRITE 75 .138X.037X.150L	STK	78488	57-1413
E5	0081718	CORE BEAD FERRITE 75 .138X.037X.150L	STK	78488	57-1413
E6	0081718	CORE BEAD FERRITE 75 .138X.037X.150L	STK	78488	57-1413
E7	0081718	CORE BEAD FERRITE 75 .138X.037X.150L	STK	78488	57-1413
J1	0105231	PIN CONNECTOR			
J2	0105231	PIN CONNECTOR			
J3	0105231	PIN CONNECTOR			
L1	0082591	INDUCTOR .39 UH SUBMIN UNSHLD 10%	DP	91637	IR-2
L2	0082567	INDUCTOR 12.5T #22 START MP2 10-32X3/8 J	XZ	02113	BY DESCRIPTION
L3	0081850	INDUCTOR 2.7 UH SUBMIN UNSHLD 5%	DP	91637	IR-2
L4	0082567	INDUCTOR 12.5T #22 START MP2 10-32X3/8 J	XZ	02113	BY DESCRIPTION
L5	0078600	NOT ASSIGNED			
L6	0078600	NOT ASSIGNED			
L7	0082345	INDUCTOR .82 UH SUBMIN UNSHLD 10%	DP	91637	IR-2

PARTS LIST

ASSEMBLY 201891 MODEL C TEU PWB ASSEMBLY - continued

ITEM	COMPONENT	DESCRIPTION	MFR	FSCM	MFR PART NUMBER
Q1	0075091	TRANSSTR 2N2857 NPN SIL	MOS	04713	2N2857
Q2	0075091	TRANSSTR 2N2857 NPN SIL	MOS	04713	2N2857
Q3	0075091	TRANSSTR 2N2857 NPN SIL	MOS	04713	2N2857
Q4	0075091	TRANSSTR 2N2857 NPN SIL	MOS	04713	2N2857
Q5	0075091	TRANSSTR 2N2857 NPN SIL	MOS	04713	2N2857
Q6	0076316	TRANSSTR 2N4036 PNP SIL	RCA	79089	2N4036S
Q7	0077148	TRANSSTR 2N3251 PNP SIL	MOS	04713	2N3251
Q8	0077147	TRANSSTR 2N3947 NPN SIL	MOS	04713	2N3947
Q9	0075091	TRANSSTR 2N2857 NPN SIL	MOS	04713	2N2857
Q10	0075091	TRANSSTR 2N2857 NPN SIL	MOS	04713	2N2857
Q11	0075091	TRANSSTR 2N2857 NPN SIL	MOS	04713	2N2857
Q12	0075091	TRANSSTR 2N2857 NPN SIL	MOS	04713	2N2857
Q13	0078850	TRANSSTR 2N2219 NPN SIL	FSC	13715	2N2219
Q14	0077148	TRANSSTR 2N3251 PNP SIL	MOS	04713	2N3251
Q15	0075091	TRANSSTR 2N2857 NPN SIL	MOS	04713	2N2857
Q16	0075091	TRANSSTR 2N2857 NPN SIL	MOS	04713	2N2857
Q17	0077147	TRANSSTR 2N3947 NPN SIL	MOS	04713	2N3947
Q18	0078850	TRANSSTR 2N2219 NPN SIL	FSC	13715	2N2219
R1	0071856	RESISTOR 33 OHM 1/4W 5% COMP	AB	01121	RCR07G330JS
R2	0078938	RESISTOR 68 OHM 1/4W 5% COMP	AB	01121	RCR07G680JS
R3	0074675	RESISTOR 100 OHM 1/4W 5% COMP	AB	01121	RCR07G101JS
R4	0074698	RESISTOR 560 OHM 1/4W 5% COMP	AB	01121	RCR07G561JS
R5	0077524	RESISTOR 75 OHM 1/4W 5% COMP	AB	01121	RCR07G750JS
R6	0083433	POT 2K OHM 1/2W CER .30 DIA VERT ADJ 4T	BLI	80294	3339P-1-202
R7	0074698	RESISTOR 560 OHM 1/4W 5% COMP	AB	01121	RCR07G561JS
R8	0083433	POT 2K OHM 1/2W CER .30 DIA VERT ADJ 4T	BLI	80294	3339P-1-202
R9	0082651	RESISTOR 910 OHM 1/4W 5% COMP	AB	01121	RCR07G911JS
R10	0077524	RESISTOR 75 OHM 1/4W 5% COMP	AB	01121	RCR07G750JS
R11	0077524	RESISTOR 75 OHM 1/4W 5% COMP	AB	01121	RCR07G750JS
R12	0075597	RESISTOR 82 OHM 1/4W 5% COMP	AB	01121	RCR07G820JS
R13	0082651	RESISTOR 910 OHM 1/4W 5% COMP	AB	01121	RCR07G911JS
R14	0074714	RESISTOR 3.3K OHM 1/4W 5% COMP	AB	01121	RCR07G332JS
R15	0085375	POT 50K OHM 1/2W CER .30 DIA VERT ADJ 4T	BLI	80294	3339-1-503
R16	0081994	RESISTOR 39 OHM 1/4W 5% COMP	AB	01121	RCR07G390JS
R17	0074696	RESISTOR 470 OHM 1/4W 5% COMP	AB	01121	RCR07G471JS
R18	0078938	RESISTOR 68 OHM 1/4W 5% COMP	AB	01121	RCR07G680JS
R19	0071937	RESISTOR 680 OHM 1/4W 5% COMP	AB	01121	RCR07G681JS
R20	0074698	RESISTOR 560 OHM 1/4W 5% COMP	AB	01121	RCR07G561JS
R21	0074675	RESISTOR 100 OHM 1/4W 5% COMP	AB	01121	RCR07G101JS
R22	0082651	RESISTOR 910 OHM 1/4W 5% COMP	AB	01121	RCR07G911JS
R23	0078938	RESISTOR 68 OHM 1/4W 5% COMP	AB	01121	RCR07G680JS
R24	0071856	RESISTOR 33 OHM 1/4W 5% COMP	AB	01121	RCR07G330JS
R25	0072026	RESISTOR 10K OHM 1/4W 10% COMP	AB	01121	RCR07G103KS

PARTS LIST

ASSEMBLY 201891 MODEL C TEU PWB ASSEMBLY - continued

ITEM	COMPONENT	DESCRIPTION	MFR	FSCM	MFR PART NUMBER
R26	0074729	RESISTOR 12K OHM 1/4W 5% COMP	AB	01121	RCR07G123JS
R27	0082649	POT 10K OHM 1/2W CER .30 DIA VERT ADJ 4T	BLI	80294	3339P-1-103
R28	0074729	RESISTOR 12K OHM 1/4W 5% COMP	AB	01121	RCR07G123JS
R29	0081061	RESISTOR 200 OHM 1/4W 5% COMP	AB	01121	RCR07G201JS
R30	0074675	RESISTOR 100 OHM 1/4W 5% COMP	AB	01121	RCR07G101JS
R31	0078600	NOT ASSIGNED			
R32	0081994	RESISTOR 39 OHM 1/4W 5% COMP	AB	01121	RCR07G390JS
R33	0074698	RESISTOR 560 OHM 1/4W 5% COMP	AB	01121	RCR07G561JS
R34	0074696	RESISTOR 470 OHM 1/4W 5% COMP	AB	01121	RCR07G471JS
R35	0074696	RESISTOR 470 OHM 1/4W 5% COMP	AB	01121	RCR07G471JS
R36	0075587	RESISTOR 51 OHM 1/4W 5% COMP	AB	01121	RCR07G510JS
R37	0081994	RESISTOR 39 OHM 1/4W 5% COMP	AB	01121	RCR07G390JS
R38	0074696	RESISTOR 470 OHM 1/4W 5% COMP	AB	01121	RCR07G471JS
R39	0074696	RESISTOR 470 OHM 1/4W 5% COMP	AB	01121	RCR07G471JS
R40	0074687	RESISTOR 220 OHM 1/4W 5% COMP	AB	01121	RCR07G221JS
R41	0077524	RESISTOR 75 OHM 1/4W 5% COMP	AB	01121	RCR07G750JS
R42	0078700	FACTORY SELECTED VALUE			
R43	0075597	RESISTOR 82 OHM 1/4W 5% COMP	AB	01121	RCR07G820JS
R44	0074698	RESISTOR 560 OHM 1/4W 5% COMP	AB	01121	RCR07G561JS
R44	0078700	FACTORY SELECTED VALUE			
R45	0075587	RESISTOR 51 OHM 1/4W 5% COMP	AB	01121	RCR07G510JS
R46	0081997	RESISTOR 91 OHM 1/4W 5% COMP	AB	01121	RCR07G910JS
R47	0074675	RESISTOR 100 OHM 1/4W 5% COMP	AB	01121	RCR07G101JS
R48	0075551	RESISTOR 10 OHM 1/4W 5% COMP	AB	01121	RCR07G100JS
R49	0074675	RESISTOR 100 OHM 1/4W 5% COMP	AB	01121	RCR07G101JS
R50	0082651	RESISTOR 910 OHM 1/4W 5% COMP	AB	01121	RCR07G911JS
R51	0071917	RESISTOR 330 OHM 1/4W 5% COMP	AB	01121	RCR07G331JS
R52	0081160	POT 500 OHM 1/2W CER .30 DIA VERT ADJ 4T	BLI	80294	3339P-1-501
R53	0071862	RESISTOR 47 OHM 1/4W 10% COMP	AB	01121	RCR07G470KS
R54	0081160	POT 500 OHM 1/2W CER .30 DIA VERT ADJ 4T	BLI	80294	3339P-1-501
R55	0074675	RESISTOR 100 OHM 1/4W 5% COMP	AB	01121	RCR07G101JS
R56	0074693	RESISTOR 390 OHM 1/4W 5% COMP	AB	01121	RCR07G391JS
R57	0074693	RESISTOR 390 OHM 1/4W 5% COMP	AB	01121	RCR07G391JS
R58	0078050	RESISTOR 10 OHM 1/8W 5% COMP	AB	01121	RCR05G100JS
R59	0087592	RESISTOR 360 OHM 1/2W 10% COMP	AB		RCR20G361JS
R60	0078050	RESISTOR 10 OHM 1/8W 5% COMP	AB	01121	RCR05G100JS
R61	0078050	RESISTOR 10 OHM 1/8W 5% COMP	AB	01121	RCR05G100JS
R62	0087592	RESISTOR 360 OHM 1/2W 10% COMP	AB		RCR20G361JS
R63	0078050	RESISTOR 10 OHM 1/8W 5% COMP	AB	01121	RCR05G100JS
R64	0074693	RESISTOR 390 OHM 1/4W 5% COMP	AB	01121	RCR07G391JS
R65	0074693	RESISTOR 390 OHM 1/4W 5% COMP	AB	01121	RCR07G391JS
R66	0071862	RESISTOR 47 OHM 1/4W 10% COMP	AB	01121	RCR07G470KS
R67	0075587	RESISTOR 51 OHM 1/4W 5% COMP	AB	01121	RCR07G510JS
R68	0081732	RESISTOR 510 OHM 1/4W 5% COMP	AB	01121	RCR07G511JS
R69	0078938	RESISTOR 68 OHM 1/4W 5% COMP	AB	01121	RCR07G680JS

ASSEMBLY 201891 MODEL C TEU PWB ASSEMBLY - continued

ITEM	COMPONENT	DESCRIPTION		MFR	FSCM	MFR PART NUMBER
R70	0081996	RESISTOR 56 OHM 1/4W 5% COMP		AB	01121	RCR07G560JS
R71	0074724	RESISTOR 6.8K OHM 1/4W 5% COMP		AB	01121	RCR07G682JS
R72	0078110	RESISTOR 180 OHM 1/4W 5% COMP		AB	01121	RCR07G181JS
R73	0075663	RESISTOR 4.3K OHM 1/4W 5% COMP		AB	01121	RCR07G432JS
R74	0074700	RESISTOR 820 OHM 1/4W 5% COMP		AB	01121	RCR07G821JS
R75	0074711	RESISTOR 2.7K OHM 1/4W 5% COMP		AB	01121	RCR07G272JS
R76	0078110	RESISTOR 180 OHM 1/4W 5% COMP		AB	01121	RCR07G181JS
R77	0074724	RESISTOR 6.8K OHM 1/4W 5% COMP		AB	01121	RCR07G682JS
R78	0074723	RESISTOR 5.6K OHM 1/4W 5% COMP		AB	01121	RCR07G562JS
R79	0074702	RESISTOR 1.0K OHM 1/4W 5% COMP		AB	01121	RCR07G102JS
R80	0078051	RESISTOR 18 OHM 1/8W 5% COMP		AB	01121	RCR05G180JS
R81	0075668	RESISTOR 8.2K OHM 1/4W 5% COMP		AB	01121	RCR07G822JS
R82	0078051	RESISTOR 18 OHM 1/8W 5% COMP		AB	01121	RCR05G180JS
R83	0075597	RESISTOR 82 OHM 1/4W 5% COMP		AB	01121	RCR07G820JS
R84	0074696	RESISTOR 470 OHM 1/4W 5% COMP		AB	01121	RCR07G471JS
R85	0074702	RESISTOR 1.0K OHM 1/4W 5% COMP		AB	01121	RCR07G102JS
R86	0082304	RESISTOR 4.3 OHM 1/4W 5% COMP		AB	01121	RCR07G4R3JS
R87	0074679	RESISTOR 150 OHM 1/4W 5% COMP		AB	01121	RCR07G151JS
R88	0084489	POT 100 OHM 1/2W CER .30 DIA VERT ADJ 4T		BLI	80294	3339P-1-101
R89	0071937	RESISTOR 680 OHM 1/4W 5% COMP		AB	01121	RCR07G681JS
R90	0082304	RESISTOR 4.3 OHM 1/4W 5% COMP		AB	01121	RCR07G4R3JS
R91	0075551	RESISTOR 10 OHM 1/4W 5% COMP		AB	01121	RCR07G100JS
R92	0074693	RESISTOR 390 OHM 1/4W 5% COMP		AB	01121	RCR07G391JS
R93	0072026	RESISTOR 10K OHM 1/4W 10% COMP		AB	01121	RCR07G103KS
R94	0075597	RESISTOR 82 OHM 1/4W 5% COMP		AB	01121	RCR07G820JS
R95	0075597	RESISTOR 82 OHM 1/4W 5% COMP		AB	01121	RCR07G820JS
R96	0074714	RESISTOR 3.3K OHM 1/4W 5% COMP		AB	01121	RCR07G332JS
T1	0201894	TRANSFORMER ASSY,TOROID 1 1				
T2	0201894	TRANSFORMER ASSY,TOROID 1 1				
U1	0084614	IC ECL GATE NOR/OR 4-IN DUAL		MOS	04713	MC1660L__
U2	0084890	IC OP AMP 8L-DIP 70C COMP	741C	MOS	04713	MC1741CP1
U3	0135993	MIXER IF DOUBLE-BALANCED		XZ		PER SA SPEC 135993
XAT1	0081666	SOCKET TO-5 CASE 3-PIN		RBN	06776	SD5173
XAT2	0081666	SOCKET TO-5 CASE 3-PIN		RBN	06776	SD5173

ASSEMBLY 202820 LOOP FILTER PWB ASSEMBLY, CHANNEL 12

ITEM	COMPONENT	DESCRIPTION	MFR	FSCM	MFR PART NUMBER
	0201896	LOOP FILTER SCHEMATIC DIAGRAM			
1	0201895	PRINTED WIRING BOARD LOOP FILTER			
C1	0080769	CAPACITR .0091 MF 100V SILVER MICA 1%	SGC	53021	D201C912F03
L1	0079095	INDUCTOR 255 UH MIN SHLD ENCAP 5%	NYT	72259	WEE-255
P1	0082827	SOCKET PIN .060-.062 CLOSED BOTTOM	CTC	71279	450-3326-01-03
P2	0082827	SOCKET PIN .060-.062 CLOSED BOTTOM	CTC	71279	450-3326-01-03
P3	0082827	SOCKET PIN .060-.062 CLOSED BOTTOM	CTC	71279	450-3326-01-03
R1	0081732	RESISTOR 510 OHM 1/4W 5% COMP	AB	01121	RCR07G511JS

ASSEMBLY 202821 LOOP FILTER PWB ASSEMBLY, CHANNEL 24

ITEM	COMPONENT	DESCRIPTION	MFR	FSCM	MFR PART NUMBER
	0201896	LOOP FILTER SCHEMATIC DIAGRAM			
1	0201895	PRINTED WIRING BOARD LOOP FILTER			
C1	0086258	CAPACITR .0047 MF 100V SILVER MICA 1%	SGC		D191F472F0
L1	0080257	INDUCTOR 150 UH SUBMIN SHLD ENCAP 5%	NYT	72259	WEE-150
P1	0082827	SOCKET PIN .060-.062 CLOSED BOTTOM	CTC	71279	450-3326-01-03
P2	0082827	SOCKET PIN .060-.062 CLOSED BOTTOM	CTC	71279	450-3326-01-03
P3	0082827	SOCKET PIN .060-.062 CLOSED BOTTOM	CTC	71279	450-3326-01-03
R1	0081732	RESISTOR 510 OHM 1/4W 5% COMP	AB	01121	RCR07G511JS

ASSEMBLY 202822 LOOP FILTER PWB ASSEMBLY, CHANNEL 36

ITEM	COMPONENT	DESCRIPTION	MFR	GSCM	MFR PART NUMBER
	0201896	LOOP FILTER SCHEMATIC DIAGRAM			
1	0201895	PRINTED WIRING BOARD LOOP FILTER			
C1	0076932	CAPACITR .0036 MF 500V SILVER MICA 5%	CD	14655	CD19FD362J03
L1	0078716	INDUCTOR 100 UH SUBMIN UNSHLD 10%	DP	91637	IR-2
P1	0082827	SOCKET PIN .060-.062 CLOSED BOTTOM	CTC	71279	450-3326-01-03
P2	0082827	SOCKET PIN .060-.062 CLOSED BOTTOM	CTC	71279	450-3326-01-03
P3	0082827	SOCKET PIN .060-.062 CLOSED BOTTOM	CTC	71279	450-3326-01-03
R1	0081732	RESISTOR 510 OHM 1/4W 5% COMP	AB	01121	RCR07G511JS

PARTS LIST

ASSEMBLY 202823 LOOP FILTER PWB ASSEMBLY, CHANNEL 48

ITEM	COMPONENT	DESCRIPTION	MFR	FSCM	MFR PART NUMBER
	0201896	LOOP FILTER SCHEMATIC DIAGRAM			
1	0201895	PRINTED WIRING BOARD LOOP FILTER			
C1	0075200	CAPACITR .0024 MF 500V SILVER MICA 5%	SGC	53021	D195C242J03
L1	0078836	INDUCTOR 68 UH SUBMIN UNSHLD 10%	DP	91637	IR-2
P1	0082827	SOCKET PIN .060-.062 CLOSED BOTTOM	CTC	71279	450-3326-01-03
P2	0082827	SOCKET PIN .060-.062 CLOSED BOTTOM	CTC	71279	450-3326-01-03
P3	0082827	SOCKET PIN .060-.062 CLOSED BOTTOM	CTC	71279	450-3326-01-03
R1	0081732	RESISTOR 510 OHM 1/4W 5% COMP	AB	01121	RCR07G511JS

ASSEMBLY 202824 LOOP FILTER PWB ASSEMBLY, CHANNEL 60

ITEM	COMPONENT	DESCRIPTION	MFR	FSCM	MFR PART NUMBER
	0201896	LOOP FILTER SCHEMATIC DIAGRAM			
1	0201895	PRINTED WIRING BOARD LOOP FILTER			
C1	0080767	CAPACITR .002 MF 500V SILVER MICA 1%	SGC	53021	D195C202F03
L1	0082599	INDUCTOR 56 UH SUBMIN UNSHLD 10%	DP	91637	IR-2
P1	0082827	SOCKET PIN .060-.062 CLOSED BOTTOM	CTC	71279	450-3326-01-03
P2	0082827	SOCKET PIN .060-.062 CLOSED BOTTOM	CTC	71279	450-3326-01-03
P3	0082827	SOCKET PIN .060-.062 CLOSED BOTTOM	CTC	71279	450-3326-01-03
R1	0081732	RESISTOR 510 OHM 1/4W 5% COMP	AB	01121	RCR07G511JS

ASSEMBLY 202825 LOOP FILTER PWB ASSEMBLY, CHANNEL 72

ITEM	COMPONENT	DESCRIPTION	MFR	FSCM	MFR PART NUMBER
	0201896	LOOP FILTER SCHEMATIC DIAGRAM			
1	0201895	PRINTED WIRING BOARD LOOP FILTER			
C1	0075196	CAPACITR .0018 MF 500V SILVER MICA 5%	CD	14655	CD19FD182J03
L1	0079986	INDUCTOR 47 UH SUBMIN UNSHLD 10%	DP	91637	IR-2
P1	0082827	SOCKET PIN .060-.062 CLOSED BOTTOM	CTC	71279	450-3326-01-03
P2	0082827	SOCKET PIN .060-.062 CLOSED BOTTOM	CTC	71279	450-3326-01-03
P3	0082827	SOCKET PIN .060-.062 CLOSED BOTTOM	CTC	71279	450-3326-01-03
R1	0081732	RESISTOR 510 OHM 1/4W 5% COMP	AB	01121	RCR07G511JS

ASSEMBLY 202826 LOOP FILTER PWB ASSEMBLY, CHANNEL 84

ITEM	COMPONENT	DESCRIPTION	MFR	FSCM	MFR PART NUMBER
	0201896	LOOP FILTER SCHEMATIC DIAGRAM			
1	0201895	PRINTED WIRING BOARD LOOP FILTER			
C1	0077901	CAPACITR .0015 MF 500V SILVER MICA 5%	CD	14655	CD19FD152J03
L1	0082598	INDUCTOR 39 UH SUBMIN UNSHLD 10%	DP	91637	IR-2
P1	0082827	SOCKET PIN .060-.062 CLOSED BOTTOM	CTC	71279	450-3326-01-03
P2	0082827	SOCKET PIN .060-.062 CLOSED BOTTOM	CTC	71279	450-3326-01-03
P3	0082827	SOCKET PIN .060-.062 CLOSED BOTTOM	CTC	71279	450-3326-01-03
R1	0081732	RESISTOR 510 OHM 1/4W 5% COMP	AB	01121	RCR07G511JS

ASSEMBLY 202827 LOOP FILTER PWB ASSEMBLY, CHANNEL 96

ITEM	COMPONENT	DESCRIPTION	MFR	FSCM	MFR PART NUMBER
	0201896	LOOP FILTER SCHEMATIC DIAGRAM			
1	0201895	PRINTED WIRING BOARD LOOP FILTER			
C1	0082395	CAPACITR .0012 MF 100V SILVER MICA 5%	SGC	53021	D151F122J0
L1	0082598	INDUCTOR 39 UH SUBMIN UNSHLD 10%	DP	91637	IR-2
P1	0082827	SOCKET PIN .060-.062 CLOSED BOTTOM	CTC	71279	450-3326-01-03
P2	0082827	SOCKET PIN .060-.062 CLOSED BOTTOM	CTC	71279	450-3326-01-03
P3	0082827	SOCKET PIN .060-.062 CLOSED BOTTOM	CTC	71279	450-3326-01-03
R1	0081732	RESISTOR 510 OHM 1/4W 5% COMP	AB	01121	RCR07G511JS

ASSEMBLY 202828 LOOP FILTER PWB ASSEMBLY, CHANNEL 108

ITEM	COMPONENT	DESCRIPTION	MFR	FSCM	MFR PART NUMBER
	0201896	LOOP FILTER SCHEMATIC DIAGRAM			
1	0201895	PRINTED WIRING BOARD LOOP FILTER			
C1	0082395	CAPACITR .0012 MF 100V SILVER MICA 5%	SGC	53021	D151F122J0
L1	0077670	INDUCTOR 33 UH SUBMIN UNSHLD 10%	DP	91637	IR-2
P1	0082827	SOCKET PIN .060-.062 CLOSED BOTTOM	CTC	71279	450-3326-01-03
P2	0082827	SOCKET PIN .060-.062 CLOSED BOTTOM	CTC	71279	450-3326-01-03
P3	0082827	SOCKET PIN .060-.062 CLOSED BOTTOM	CTC	71279	450-3326-01-03
R1	0081732	RESISTOR 510 OHM 1/4W 5% COMP	AB	01121	RCR07G511JS

PARTS LIST

ASSEMBLY 202829 LOOP FILTER PWB ASSEMBLY, CHANNEL 120

ITEM	COMPONENT	DESCRIPTION	MFR	FSCM	MFR PART NUMBER
	0201896	LOOP FILTER SCHEMATIC DIAGRAM			
1	0201895	PRINTED WIRING BOARD LOOP FILTER			
C1	0075193	CAPACITR .001 MF 500V SILVER MICA 5%	CD	14655	CD19FD102J03
L1	0077670	INDUCTOR 33 UH SUBMIN UNSHLD 10%	DP	91637	IR-2
P1	0082827	SOCKET PIN .060-.062 CLOSED BOTTOM	CTC	71279	450-3326-01-03
P2	0082827	SOCKET PIN .060-.062 CLOSED BOTTOM	CTC	71279	450-3326-01-03
P3	0082827	SOCKET PIN .060-.062 CLOSED BOTTOM	CTC	71279	450-3326-01-03
R1	0081732	RESISTOR 510 OHM 1/4W 5% COMP	AB	01121	RCR07G511JS

ASSEMBLY 202830 LOOP FILTER PWB ASSEMBLY, CHANNEL 132

ITEM	COMPONENT	DESCRIPTION	MFR	FSCM	MFR PART NUMBER
	0201896	LOOP FILTER SCHEMATIC DIAGRAM			
1	0201895	PRINTED WIRING BOARD LOOP FILTER			
C1	0075193	CAPACITR .001 MF 500V SILVER MICA 5%	CD	14655	CD19FD102J03
L1	0079317	INDUCTOR 27 UH SUBMIN UNSHLD 10%	DP	91637	IR-2
P1	0082827	SOCKET PIN .060-.062 CLOSED BOTTOM	CTC	71279	450-3326-01-03
P2	0082827	SOCKET PIN .060-.062 CLOSED BOTTOM	CTC	71279	450-3326-01-03
P3	0082827	SOCKET PIN .060-.062 CLOSED BOTTOM	CTC	71279	450-3326-01-03
R1	0081732	RESISTOR 510 OHM 1/4W 5% COMP	AB	01121	RCR07G511JS

ASSEMBLY 202831 LOOP FILTER PWB ASSEMBLY, CHANNEL 144

ITEM	COMPONENT	DESCRIPTION	MFR	FSCM	MFR PART NUMBER
	0201896	LOOP FILTER SCHEMATIC DIAGRAM			
1	0201895	PRINTED WIRING BOARD LOOP FILTER			
C1	0073498	CAPACITR 820 PF 500V SILVER MICA 5%	CD	14655	CD19FD821J03
L1	0079317	INDUCTOR 27 UH SUBMIN UNSHLD 10%	DP	91637	IR-2
P1	0082827	SOCKET PIN .060-.062 CLOSED BOTTOM	CTC	71279	450-3326-01-03
P2	0082827	SOCKET PIN .060-.062 CLOSED BOTTOM	CTC	71279	450-3326-01-03
P3	0082827	SOCKET PIN .060-.062 CLOSED BOTTOM	CTC	71279	450-3326-01-03
R1	0081732	RESISTOR 510 OHM 1/4W 5% COMP	AB	01121	RCR07G511JS

ASSEMBLY 202832 LOOP FILTER PWB ASSEMBLY, CHANNEL 180

ITEM	COMPONENT	DESCRIPTION	MFR	FSCM	MFR PART NUMBER
	0201896	LOOP FILTER SCHEMATIC DIAGRAM			
1	0201895	PRINTED WIRING BOARD LOOP FILTER			
C1	0070542	CAPACITR 680 PF 500V SILVER MICA 5%	CD	14655	CD19FD681J03
L1	0082597	INDUCTOR 22 UH SUBMIN UNSHLD 10%	DP	91637	IR-2
P1	0082827	SOCKET PIN .060-.062 CLOSED BOTTOM	CTC	71279	450-3326-01-03
P2	0082827	SOCKET PIN .060-.062 CLOSED BOTTOM	CTC	71279	450-3326-01-03
P3	0082827	SOCKET PIN .060-.062 CLOSED BOTTOM	CTC	71279	450-3326-01-03
R1	0081732	RESISTOR 510 OHM 1/4W 5% COMP	AB	01121	RCR07G511JS

ASSEMBLY 202833 LOOP FILTER PWB ASSEMBLY, CHANNEL 192

ITEM	COMPONENT	DESCRIPTION	MFR	FSCM	MFR PART NUMBER
	0201896	LOOP FILTER SCHEMATIC DIAGRAM			
1	0201895	PRINTED WIRING BOARD LOOP FILTER			
C1	0070542	CAPACITR 680 PF 500V SILVER MICA 5%	CD	14655	CD19FD681J03
L1	0082596	INDUCTOR 18 UH SUBMIN UNSHLD 10%	DP	91637	IR-2
P1	0082827	SOCKET PIN .060-.062 CLOSED BOTTOM	CTC	71279	450-3326-01-03
P2	0082827	SOCKET PIN .060-.062 CLOSED BOTTOM	CTC	71279	450-3326-01-03
P3	0082827	SOCKET PIN .060-.062 CLOSED BOTTOM	CTC	71279	450-3326-01-03
R1	0081732	RESISTOR 510 OHM 1/4W 5% COMP	AB	01121	RCR07G511JS

ASSEMBLY 202834 LOOP FILTER PWB ASSEMBLY, CHANNEL 252

ITEM	COMPONENT	DESCRIPTION	MFR	FSCM	MFR PART NUMBER
	0201896	LOOP FILTER SCHEMATIC DIAGRAM			
1	0201895	PRINTED WIRING BOARD LOOP FILTER			
C1	0078831	CAPACITR 510 PF 100V SILVER MICA 5%	CD	14655	CD7FA511J03
L1	0078975	INDUCTOR 15 UH SUBMIN UNSHLD 10%	DP	91637	IR-2
P1	0082827	SOCKET PIN .060-.062 CLOSED BOTTOM	CTC	71279	450-3326-01-03
P2	0082827	SOCKET PIN .060-.062 CLOSED BOTTOM	CTC	71279	450-3326-01-03
P3	0082827	SOCKET PIN .060-.062 CLOSED BOTTOM	CTC	71279	450-3326-01-03
R1	0081732	RESISTOR 510 OHM 1/4W 5% COMP	AB	01121	RCR07G511JS

ASSEMBLY 202835 LOOP FILTER PWB ASSEMBLY, CHANNEL 312

ITEM	COMPONENT	DESCRIPTION	MFR	FSCM	MFR PART NUMBER
	0201896	LOOP FILTER SCHEMATIC DIAGRAM			
1	0201895	PRINTED WIRING BOARD LOOP FILTER			
C1	0082401	CAPACITR 400 PF 500V SILVER MICA 1%	SGC	53021	D155C401F03
L1	0082595	INDUCTOR 12 UH SUBMIN UNSHLD 10%	DP	91637	IR-2
P1	0082827	SOCKET PIN .060-.062 CLOSED BOTTOM	CTC	71279	450-3326-01-03
P2	0082827	SOCKET PIN .060-.062 CLOSED BOTTOM	CTC	71279	450-3326-01-03
P3	0082827	SOCKET PIN .060-.062 CLOSED BOTTOM	CTC	71279	450-3326-01-03
R1	0081732	RESISTOR 510 OHM 1/4W 5% COMP	AB	01121	RCR07G511JS

ASSEMBLY 202836 LOOP FILTER PWB ASSEMBLY, CHANNEL 360

ITEM	COMPONENT	DESCRIPTION	MFR	FSCM	MFR PART NUMBER
	0201896	LOOP FILTER SCHEMATIC DIAGRAM			
1	0201895	PRINTED WIRING BOARD LOOP FILTER			
C1	0070534	CAPACITR 330 PF 500V SILVER MICA 5%	CD	14655	CD15FD331J03
L1	0079926	INDUCTOR 10 UH SUBMIN UNSHLD 10%	DP	91637	IR-2
P1	0082827	SOCKET PIN .060-.062 CLOSED BOTTOM	CTC	71279	450-3326-01-03
P2	0082827	SOCKET PIN .060-.062 CLOSED BOTTOM	CTC	71279	450-3326-01-03
P3	0082827	SOCKET PIN .060-.062 CLOSED BOTTOM	CTC	71279	450-3326-01-03
R1	0081732	RESISTOR 510 OHM 1/4W 5% COMP	AB	01121	RCR07G511JS

ASSEMBLY 202838 LOOP FILTER PWB ASSEMBLY, CHANNEL 372

ITEM	COMPONENT	DESCRIPTION	MFR	FSCM	MFR PART NUMBER
	0201896	SCHEMATIC,LOOP,FILTER			
1	0201895	PRINTED WIRING BOARD LOOP FILTER			
C001	0070534	CAPACITR 330 PF 500V SILVER MICA 5%	CD	14655	CD15FD331J03
L001	0079926	INDUCTOR 10 UH SUBMIN UNSHLD 10%	DP	91637	IR-2
P001	0082827	SOCKET PIN .060-.062 CLOSED BOTTOM	CTC	71279	450-3326-01-06-00
P002	0082827	SOCKET PIN .060-.062 CLOSED BOTTOM	CTC	71279	450-3326-01-06-00
P003	0082827	SOCKET PIN .060-.062 CLOSED BOTTOM	CTC	71279	450-3326-01-06-00
R001	0081732	RESISTOR 510 OHM 1/4W 5% COMP	AB	01121	RCR07G511JS

PARTS LIST

ASSEMBLY 202837 LOOP FILTER PWB ASSEMBLY, CHANNEL 432

ITEM	COMPONENT	DESCRIPTION	MFR	FSCM	MFR PART NUMBER
	0201896	LOOP FILTER SCHEMATIC DIAGRAM			
1	0201895	PRINTED WIRING BOARD LOOP FILTER			
C1	0070532	CAPACITR 300 PF 500V SILVER MICA 5%	CD	14655	CD15FD301J03
L1	0078508	INDUCTOR 3.2 UH SUBMIN UNSHLD 10%	DP	91637	IR-2
P1	0082827	SOCKET PIN .060-.062 CLOSED BOTTOM	CTC	71279	450-3326-01-03
P2	0082827	SOCKET PIN .060-.062 CLOSED BOTTOM	CTC	71279	450-3326-01-03
P3	0082827	SOCKET PIN .060-.062 CLOSED BOTTOM	CTC	71279	450-3326-01-03
R1	0081732	RESISTOR 510 OHM 1/4W 5% COMP	AB	01121	RCR07G511JS

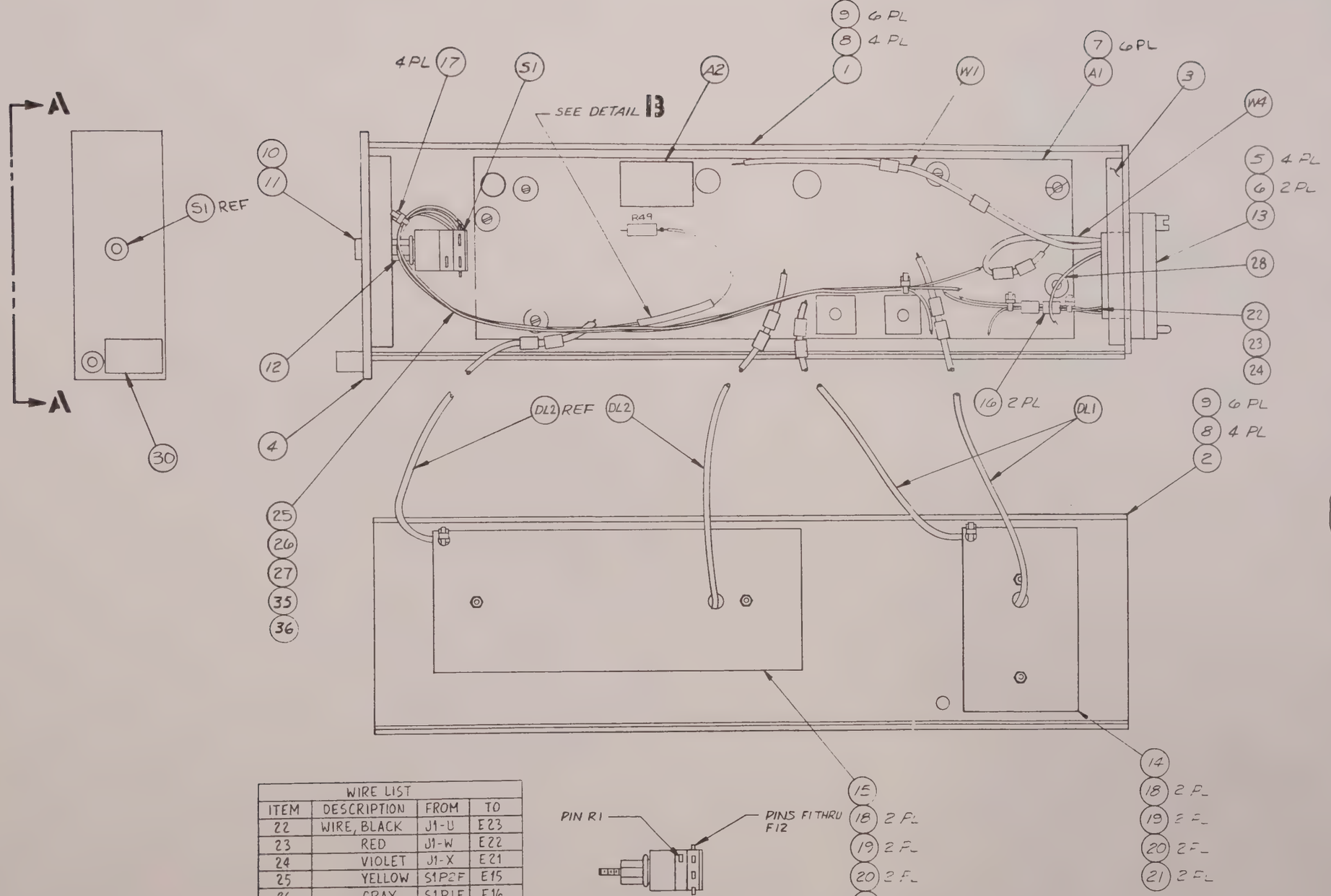

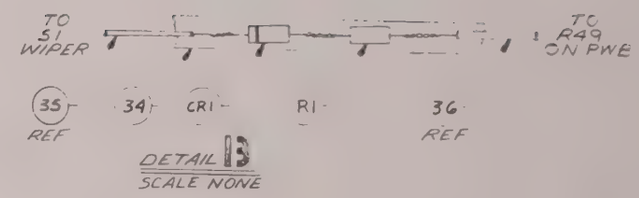

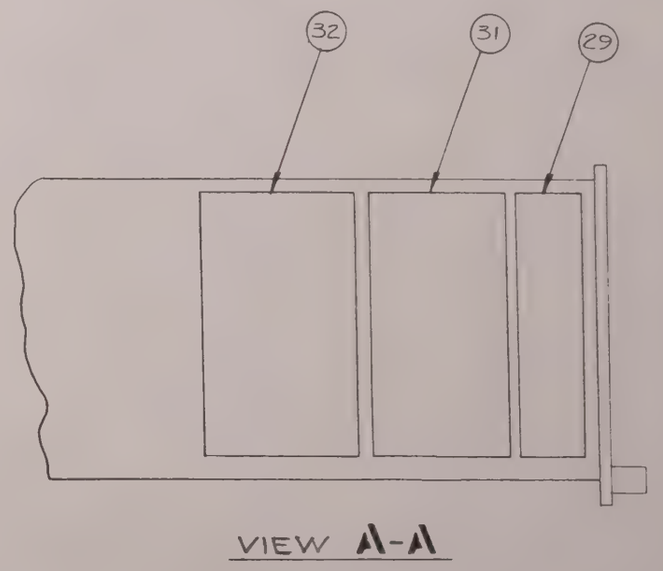

WIRE LIST			
ITEM	DESCRIPTION	FROM	TO
22	WIRE, BLACK	J1-U	E23
23	RED	J1-W	E22
24	VIOLET	J1-X	E21
25	YELLOW	S1P2F	E15
26	GRAY	S1P1F	E16
27	BLUE	S1P1R	E17
28	WHITE	J1-F	E24
W1		J1-B	E20
W2		E25	E26
W3		E27	E28
W4		J1-A	E19
35	RED/WHT	S1P1R	CATH, CR1
36	RED/WHT	R1	R49

Figure 21A-5. Model C TEU Module Assembly 201880F

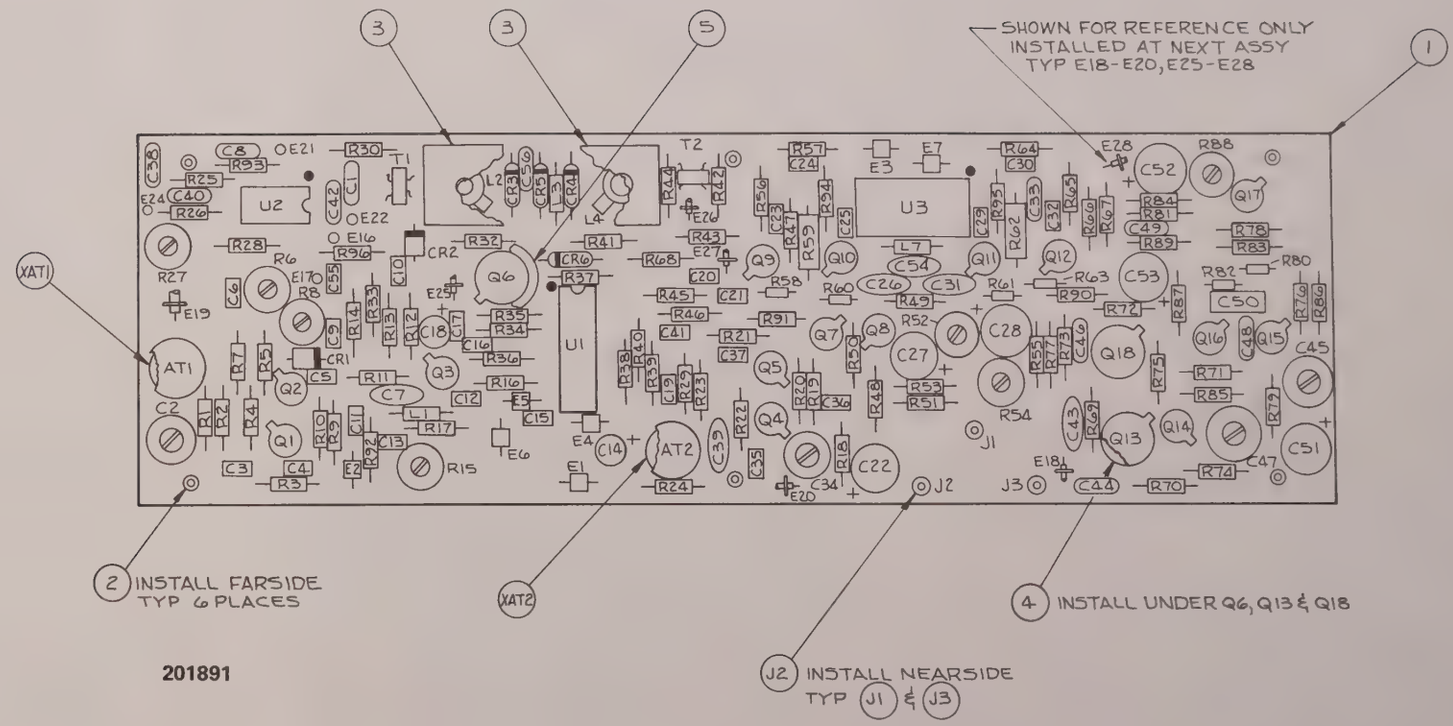

201891

Figure 21A-6. Model C TEU PWB Assembly

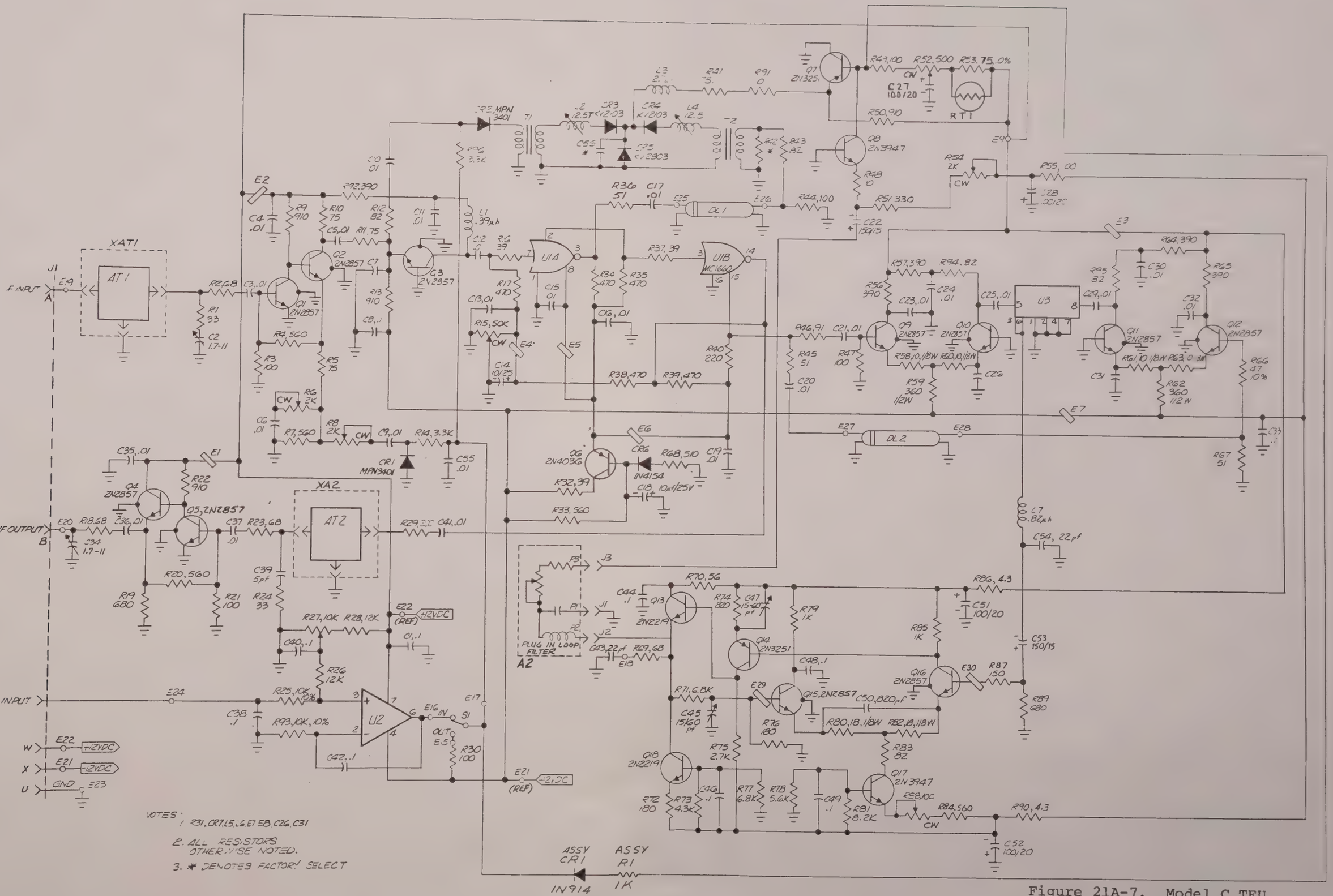

NOTES:
1. R31, CR7, L5, L6, E7, E8, C26, C31
2. ALL RESISTORS OTHERWISE NOTED.
3. * DENOTES FACTORY SELECT

Figure 21A-7. Model C TEU Schematic Diagram 201892E

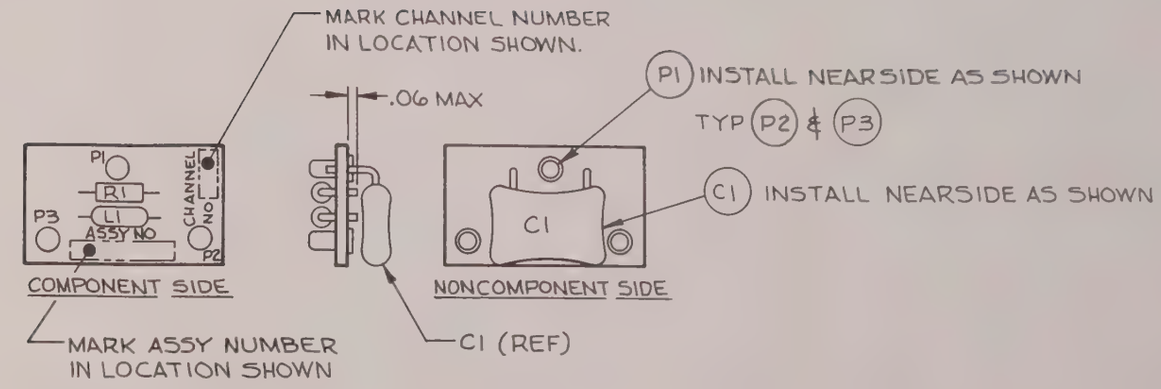

202820-202839

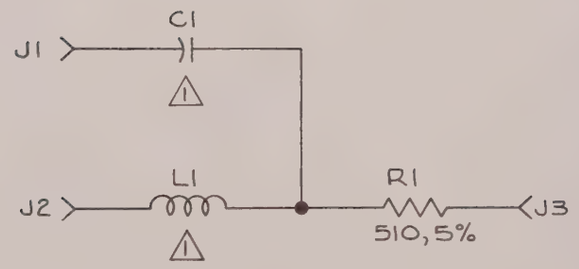

NEXT ASSY NO.	CHANNEL NO.	C1 VALUE (Pf)	L1 VALUE (μH)
202820	12	9100	255
202821	24	4700	150
202822	36	3600	100
202823	48	2400	68
202824	60	2000	56
202825	72	1800	47
202826	84	1500	39
202827	96	1200	39
202828	108	1200	33
202829	120	1000	33
202830	132	1000	27
202831	144	820	27
202832	180	680	22
202833	192	680	18
202834	252	510	15
202835	312	400	12
202836	360	360	10
202837	432	300	8.2
202838	372	330	10
202839	SPARE	——	——

NOTES:

⚠ SEE CHART FOR COMPONENT VALUE.

201896

Figure 21A-8. Loop Filter PWB Assembly and Schematic Diagram

IMPORTANT NOTE

The information behind this tabbed divider may apply to more than one item. Check all pages carefully.

33R0602

IMPORTANT NOTE

The information behind this tabbed divider may apply to more than one item. Check all pages carefully.

33R0602

SECTION 22
RECEIVE BASEBAND AMPLIFIER--PART NO. 131612

22.1 DESCRIPTION

The receive baseband amplifier is a plug-in unit intended for use in the Scientific-Atlanta Series 411 Receiver equipment. In addition to providing a minimum of +10 dB of baseband amplification and de-emphasis of the baseband signal, rejection of the energy dispersal waveform is accomplished via a 3-kHz high-pass filter. Channel-capacity change is easily accomplished by changing the plug-in de-emphasis board. Power is furnished from receiver mainframe.

Figure 22-1. Receive Baseband Amplifier Part No. 131612

Technical characteristics of the receive baseband amplifier are listed below. Table 22-1 lists the de-emphasis boards required for different channel capacities.

Characteristic	Specification
Input/Output Impedance	75 ohms
Gain	10 dB Min
Frequency Response	
4-12 kHz	$\leq \pm$0.4 dB
12 kHz - 8.2 MHz	$\leq \pm$0.1 dB
12 kHz - Max Freq. (de-emphasis)	$\leq \pm$0.2 dB

Table 22-1. Receive Baseband Amplifier De-Emphasis Boards (Per CCIR Rec 275-2 and ICSC-45-13E)

Channel Capacity	Test Tone freq. (kHz)	f_m (kHz)*	S-A Part No.
12	36.48	60	141422
24	65.66	108	131705
36	94.85	156	131706
48	124.0	204	141433
60	153.22	252	131707
72	182.40	300	131708
84	218.9	360	141444
96	248.06	408	131709
108	277.2	456	141445
120	306.4	504	141446
132	335.62	552	131710
144	372.1	612	141447
180	459.6	756	141448

*f_m = maximum baseband frequency

Table 22-1. Receive Baseband Amplifier De-Emphasis Boards
(Per CCIR Rec 275-2 and ICSC-45-13E) - continued

Channel Capacity	Test Tone freq. (kHz)	f_m (kHz)*	S-A Part No.
192	488.83	804	131711
252	639.62	1052	131712
312	790.40	1300	131713
360	912.0	1500	141449
432	1091.97	1796	131714
612	1544.32	2540	131715
792	1996.67	3284	131716
972	2449.02	4028	131717
1092	2974. 34	4892	131718
1872	4936.96	8120	131719

22.1.2 Construction

The receive baseband amplifier module consists of four plug-in modules (two amplifier modules, one high-pass filter module, and one de-emphasis module) and a mother board which provides interconnection between the plug-in modules. De-emphasis or flat response is selected using a front-panel switch. Input and output connections are made through an interface connector on the back of the module.

22.1.3 Circuit Description

22.1.3.1 General. Figure 22-2 is a block diagram of the receive baseband amplifier.

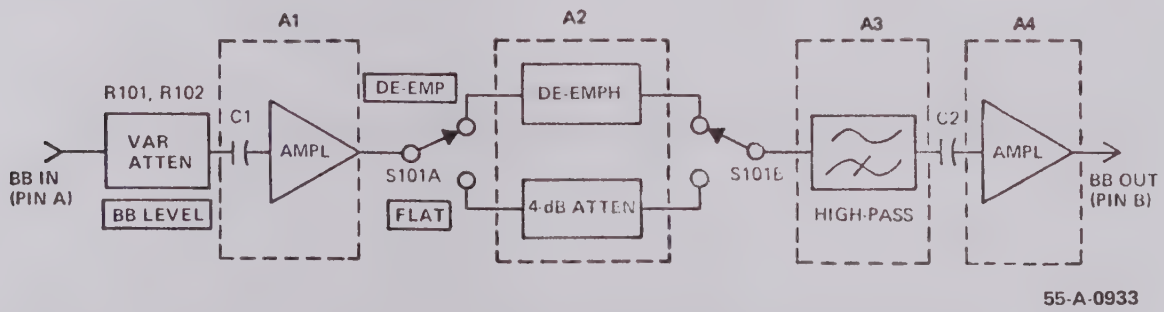

Figure 22-2. Receive Baseband Amplifier Block Diagram

22.2.1.1 Removal and Replacement of Plug-In Boards. Removal: Use a small screwdriver to carefully pry up each side of the board slightly until the edges of board can be grasped. Slowly pull the board straight up using only the edges of the board.

Repalcement: First inspect all pins of the board to be sure none of them are bent. If they are bent, straighten them with a pair of long-nosed pliers. Slowly lower the board until all pins are touching the mating holes. If some pins do not line up properly, carefully bend them with a pair of long-nosed pliers. When all pins appear to line up, apply a slight amount of pressure to the board until all pins are partially into the holes. Press the board all the way down.

22.2.2 Alignment and Performance Testing

Scientific-Atlanta Test Procedures 132385, 134114, and 134115 are reproduced on the following pages. They can be used to verify that the baseband amplifier and its subassemblies are operating properly. Refer to figure 22-3 for adjustment locations. No adjustments should be required during normal operation.

22.3 REPLACEMENT PARTS

Replacement parts lists for the baseband amplifier and its subassemblies start on page 22-7 immediately following the test procedures. These lists contain descriptive information on those items that are considered replaceable in the baseband amplifier. Refer to section 6 of this instruction manual for further information.

APPLICATION		REVISIONS			
NEXT ASSY	USED ON	SYM	DESCRIPTION	DATE	APPROVED

REV																													
SHEET																													
REV STATUS	REV	A	A																										
OF SHEETS	SHEET	2	5																										

ALL DIMENSIONS ARE IN INCHES UNLESS OTHERWISE SPECIFIED

TOLERANCES
3 PLACE DECIMALS ±.005
2 PLACE DECIMALS ±.02
1 PLACE DECIMAL ±.1

FRACTIONS ± ANGLES ±0°30'

MAX SURFACE ROUGHNESS 125 ALL MACHINED SURFACES EXCEPT AS NOTED

BREAK SHARP EDGES AND CORNERS .010 MAX

FINISH

CONTRACT NO.

DWN DAK 3-12-76

ENGR R.W. Vandecar 4-7-76

CHK

PROD

APVD Hej Wegener 4-7-76

APVD

Scientific-Atlanta, Inc.

3845 Pleasantdale Road, Atlanta, Georgia 30340

TEST PROCEDURE
VIDEO AMPLIFIER, P/N 131821

SIZE	CODE IDENT NO.	DRAWING NO.
A	10110	134114

SCALE	REV	SHEET
	A	1 of 5

SA434-871

1.0 GENERAL

The purpose of this test procedure is to set the balance and frequency response and to check the gain of the video plug-in amplifier.

2.0 TEST EQUIPMENT

The following test equipment or its equivalent is required for this test.

Qty	Description	Mfg/Model No.
1	Tracking Oscillator	HP/313A
1	Wave Analyzer	HP/312A
1	Oscilloscope	Tektronix/454
1	Video Plug-In Amp Test Fixture	S-A
1	75-ohm Feedthrough Termination	Tektronix 011-0103-02

3.0 TEST PROCEDURE

Connect the equipment as shown in figure 1.

3.1 DC Balance

a. Connect the amplifier output (E7) to the terminated oscilloscope.

b. Set the output level of the 313A to -70 dBm.

c. Adjust R1 for an output level of 0V ±20 mV. Check data sheet.

NOTE

Final dc balance adjustment of the video plug-in amplifier module should be made in the assembly in which it is used. This can easily be done using a voltmeter. Connect the voltmeter probe to the collector of Q4 (case) and adjust R1 for a 0V dc output. (Very slight adjustment at C4 may also be required when the video plug-in amplifier is in the assembly in which it is used to allow the assembly to meet its overall flatness specification.)

3.2 Frequency Response and Gain Check

a. Calibrate the output level of the 313A and the reading of the 312A at 0 dBm out.

b. At -15.5 dBm level out of the 313A, check the 312A and 313A back-to-back from 10 kHz to 200 kHz, and at 1.2, 2.2, 3.2, 4.2, 5.2, 6.2, 7.2, and 8.2 MHz. Note any deviations from a flat response.

c. Set the 313A to 10 kHz and measure the gain of the amplifier by adjusting the 313A attenuator until the 313A meter reads 0 dBm (in 312A expand operation). Record gain on data sheet.

d. Set the frequency to 8.2 MHz. Adjust C4 until the same level is obtained as at 10 kHz (take into account any deviations noted in step b).

e. Check the frequency response at the frequencies of step b. Check data sheet.

f. Set the frequency to 8.2 MHz. Connect the output of the amplifier to the terminated scope. Adjust the attenuator of the 313A until a 2.0-volt p-p signal is seen on the scope. Note that the output is free from any distortion. Check data sheet.

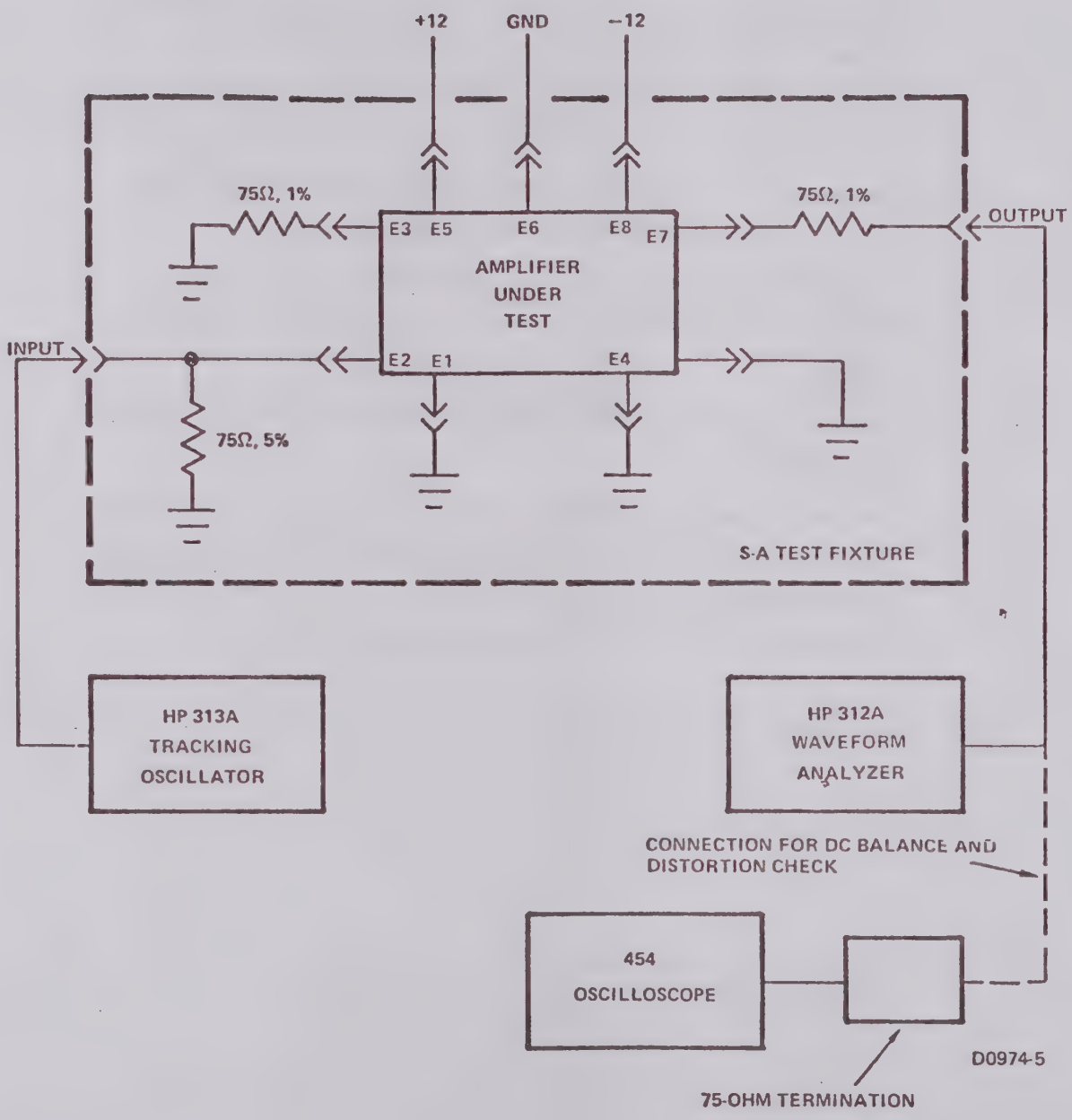

Figure 1. Test Setup

	SIZE	CODE IDENT NO.	DRAWING NO.
	A	10110	134114
	SCALE	REV	SHEET 4

TEST DATA SHEET

Video Plug-In Amplifier

P/N 131821 S/N _____

Date _____ Technician _____

Approved _____

Ref Para		Measured	Required
3.1-c	DC balance	_____ check OK	0 ±20 mV
3.2-c	Gain	_____ dB	15.5 ±0.5 dB
3.2-e	Frequency response	_____ check OK	±0.1 dB 10 kHz to 8.2 MHz
3.2-f	Distortion	_____ check OK	

	SIZE	CODE IDENT NO.	DRAWING NO.
	A	10110	134114
	SCALE	REV A	SHEET 5

APPLICATION		REVISIONS			
NEXT ASSY	USED ON	SYM	DESCRIPTION	DATE	APPROVED

REV																										
SHEET																										
REV STATUS	REV	A	A	A	A																					
OF SHEETS	SHEET	2	3	4	6																					

ALL DIMENSIONS ARE IN INCHES UNLESS OTHERWISE SPECIFIED

TOLERANCES
3 PLACE DECIMALS ± .005
2 PLACE DECIMALS ± .02
1 PLACE DECIMAL ± .1

ACTIONS ± ANGLES ± 0° 30'

MAX SURFACE ROUGHNESS 125 ALL MACHINED SURFACES EXCEPT AS NOTED

BREAK SHARP EDGES AND CORNERS .010 MAX

FINISH

CONTRACT NO

DWN 4-7-76

ENGR R W Vandiver 4-7-76

CHK

PROD

APVD Harry W Rogers 4-7-76

APVD

Scientific-Atlanta, Inc.

3845 Pleasantdale Road, Atlanta, Georgia 30340

TEST PROCEDURE
RECEIVE BASEBAND AMPLIFIER
PART NO. 131612

SIZE	CODE IDENT NO.	DRAWING NO.
A	10110	132385

SCALE | REV A | SHEET 1 of 6

SA434-871

1.0 GENERAL

The purpose of this procedure is to properly align and adjust the receive baseband amplifier after all internal plug-in modules have been inserted. Refer to Test Procedure 134114 for individual testing of the plug-in video amplifier and Test Procedure 134115 for individual testing of the de-emphasis networks. The high-pass filter is not tested separately unless ordered separately.

2.0 TEST EQUIPMENT REQUIRED

1	Tracking Oscillator	HP/313A
1	Wave Analyzer	HP/312A
1	Oscilloscope	Tektronix/454
1	75 ohm Feedthrough Termination	Tektronix/011-0103-02
1	Pre-Emphasis Network	Scientific-Atlanta

3.0 TEST PROCEDURE

Figure 1 shows the test setup. Power and access to inputs and outputs may be obtained using a module extender out of the mainframe test slot.

3.1 Balance Set

a. Set the level of the 313A to -90 dBm.

b. Set the BB LEVEL control fully clockwise.

c. Monitor the collector (case) of Q4 on A1 with a Tektronix X10 scope probe and adjust R1 of A1 for 0V ±20mV out. Check data sheet.

d. Monitor the collector (case) of Q4 on A4 with the scope probe and adjust R1 of A1 for 0V ±20mV out. Check data sheet.

3.2 Gain and Frequency Response

a. Set the front-panel switch to FLAT. Check data sheet.

b. Adjust the 313A output level for -25 dBm out at the test-tone frequency (see table 1). Record the TT frequency and maximum BB frequency.

c. Turn the BB LEVEL control fully clockwise and record the maximum gain.

d. Adjust the BB LEVEL control for 0 dB gain. Check data sheet.

e. Check the back-to-back frequency response of the 312A and 313A noting any discrepancies from a flat response.

f. Check the frequency response of the receive baseband amplifier from 4 kHz to 12 kHz and mark the data sheet.

g. Set the frequency of the 312A to 8.2 MHz and slightly adjust C4 of A1 and A4 as needed for a flat response. Remember to include any discrepancies from a flat back-to-back response noted in step e.

h. Check the frequency response from 12 kHz to 200 kHz. Check the frequency response from 200 kHz to 8.2 MHz in 1-MHz steps and mark the data sheet.

i. Slowly reduce the frequency of the 312A from 4 kHz and note the 3 dB frequency. Record on data sheet.

j. Reset 312A to test-tone frequency.

k. Switch the front-panel switch to DE-EMP. Check the data sheet that the output level has not changed more than $\pm$0.3 dB. Insert the proper pre-emphasis network between the 313A and the receive baseband amplifier input.

l. Set a reference level at the test-tone frequency and note the frequency response from 12 kHz to the maximum frequency of the channel capacity used. Check data sheet.

3.3 Re-Assembly Note

It is very important that only No. 4 - 40 x 1/8-inch flat-head screws are used along the top and bottom sides of module during re-assembly. Circuit shorts will occur if screws longer than these are used.

Table 1. Baseband Information

Channel Capacity	Part No.	Max BB Freq (kHz) f_m	Test Tone Freq (kHz)
12	141422	60	36.48
24	131705	108	65.66
36	131706	156	94.85
48	141433	204	124.00
60	131707	252	153.22
72	131708	300	182.40
84	141444	360	218.90
96	131709	408	248.06
108	141445	456	277.20
120	141446	504	306.40
132	131710	552	335.62
144	141447	612	372.10
180	141448	756	459.60
192	131711	804	488.83
252	131712	1052	639.62
312	131713	1300	790.40
360	141449	1500	912.00
432	131714	1796	1091.97
612	131715	2540	1544.32
792	131716	3284	1996.67
972	131717	4028	2449.02
1092	131718	4892	2974.34
1872	131719	8120	4936.96

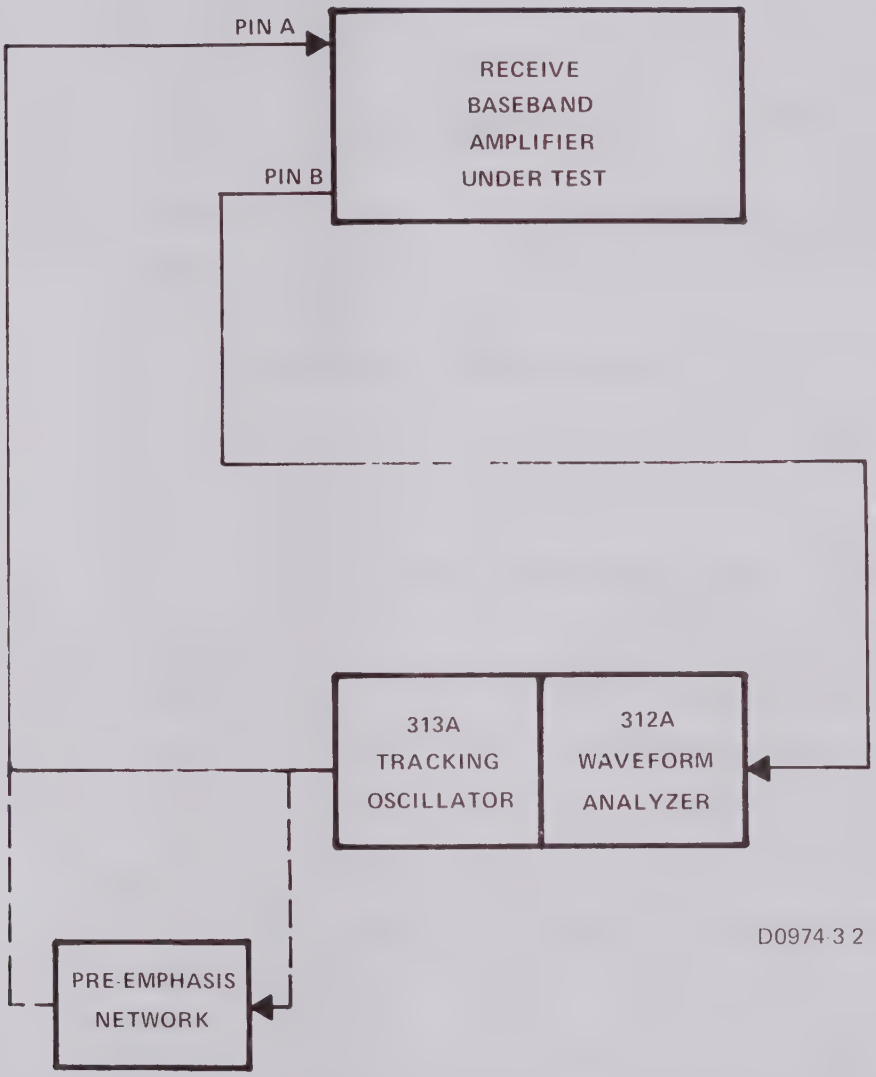

Figure 1. Test Setup

SIZE	CODE IDENT NO.	DRAWING NO.
A	10110	132385
SCALE	REV	SHEET 5

TEST DATA SHEET

Receive Baseband Amplifier

P/N 131612 S/N _____

Date _____ Technician _____

Approved _____

The unit is equipped with the following plug-in modules.

De-Emp Network for _____ channels S/N _____

High-Pass Filter $F_{3\ dB} = 3.0 \pm 0.5$ kHz

Balance, Gain and Flatness Check

Para Ref			Required
3.1-c	Input and output terminated in 75 ohms		
3.1-c	Input amp dc balance	_____ check OK	0V ±20 mV
3.1-d	Output amp dc balance	_____ check OK	0V ±20 mV
	Front-panel switch to FLAT	_____ check OK	
3.2-b	Test-tone frequency	_____ kHz	
3.2-b	Max BB frequency	_____ kHz	
3.2-c	Max gain at TT frequency	_____ dB	+10 dB min
3.2-d	Set for 0 dB gain at TT frequency	_____ check OK	
3.2-	Frequency response relative to TT frequency		
3.2-f	4-12 kHz	_____ check OK	±0.4 dB
3.2-k	12 kHz - 8.2 MHz	_____ check OK	±0.1 dB
3.2-i	High-pass filter 3-dB frequency	_____ check OK	3 ±0.5 kHz
3.2-j	Front-panel switch to DE-EMP; proper pre-emp network installed.		
	Output level change at TT frequency	_____ check OK	±0.3 dB
	Frequency response 12 kHz to Max frequency	_____ check OK	±0.2 dB

SIZE	CODE IDENT NO.	DRAWING NO.
A	10110	132385
SCALE	REV A	SHEET 6

APPLICATION		REVISIONS			
NEXT ASSY	USED ON	SYM	DESCRIPTION	DATE	APPROVED

REV																											
SHEET																											
REV STATUS	REV	A	A	A	A	A																					
OF SHEETS	SHEET	1	2	3	4	6																					

ALL DIMENSIONS ARE IN INCHES UNLESS OTHERWISE SPECIFIED

TOLERANCES
3 PLACE DECIMALS ± .005
2 PLACE DECIMALS ± .02
1 PLACE DECIMAL ± .1

FRACTIONS ± ANGLES ± 0°30'

MAX SURFACE ROUGHNESS 125 ALL MACHINED SURFACES EXCEPT AS NOTED

BREAK SHARP EDGES AND CORNERS .010 MAX

FINISH

CONTRACT NO

DWN

ENGR R.W. VanDeCar 4-7-76

CHK

PROD

APVD Henry Wegener 4-7-76

APVD

Scientific-Atlanta, Inc.

3845 Pleasantdale Road, Atlanta, Georgia 30340

TEST PROCEDURE
DE-EMPHASIS NETWORK

SIZE	CODE IDENT NO.	DRAWING NO.
A	10110	134115

SCALE	REV	SHEET
	A	1 of 6

SA434-871

1.0 GENERAL

The purpose of this test is to align the de-emphasis board to meet the specifications of CCIR recommendation 275.2 and ICSC-45-13E.

2.0 TEST EQUIPMENT REQUIRED

Qty	Description	Mfg/Model No.
1	Tracking Oscillator	HP/313A
1	Wave Analyzer	HP/312A
1	De-Emphasis Board Test Fixture	Scientific-Atlanta

3.0 TEST PROCEDURE

Connect the equipment as shown in figure 1.

3.1 Frequency Response Adjustment

a. Record on test data sheet the crossover frequency (f_x) and resonant frequency (f_r) from table 1 for the appropriate de-emphasis network.

b. On the 312A set:

AMPLITUDE RANGE to 0
REFERENCE LEVEL to -10
INPUT MODE to "terminated"
IMPEDANCE to 75 ohms
Frequency to f_x

c. On the 313A set:

Oscillator mode to TRACK 312A
Meter mode to 312A EXPAND
MAX OUTPUT to 0 dBm
Attenuator for -10 dBm at the 312A input

d. Use the SCALE OFFSET control on the 313A to zero, the 313A meter at f_x.

e. Set the 312A to f_r. Decrease the attenuator on the 313A by 5 dB.

f. Calculate the frequencies on data sheet. Check the 312A and 313A back-to-back at the calculated frequencies and record the deviations from a flat response.

g. Insert the de-emphasis network. Set the frequency to f_x. Use the 313A attenuator and SCALE OFFSET control to zero on the 313A meter. The crossover-frequency loss is shown on table 1.

h. Adjust L1 and L2 until the 313A meter reads as close to zero as possible. The reading should be within $\pm$0.10.

i. Setting the 312A to the frequencies calculated in step 6, record the level changes at these frequencies by adjusting the attenuator on the 313A until the meter is within $\pm$0.10 of nulling. When recording the level changes be sure to take into account the back-to-back deviations from a flat response recorded in step 6.

Table 1. De-Emphasis Boards (Per CCIR Recommendation 275-2 and ICSC-45-13E)

Channel Capacity	Part No.	Maximum Freq, f_m (kHz)	Crossover Freq, f_x (kHz)	Resonant Freq, f_r (kHz)
12	141422	60	36.48	75
24	131705	108	65.66	135
36	131706	156	94.85	195
48	141433	204	124	255
60	131707	252	153.22	315
72	131708	300	182.40	375
84	141444	360	218.9	450
96	131709	408	248.06	510
108	141445	456	277.2	570
120	141446	504	306.4	630
132	131710	552	335.62	690
144	141447	612	372.1	765
180	141448	756	459.6	945
192	131711	804	488.83	1005
252	131712	1052	639.62	1315
312	131713	1300	790.40	1625
360	141449	1500	912.0	1875
432	131714	1796	1091.97	2245
612	131715	2540	1544.32	3175
792	131716	3284	1996.67	4105
972	131717	4028	2449.02	5035
1092	131718	4892	2974.34	6115
1872	131719	8120	4936.96	10150

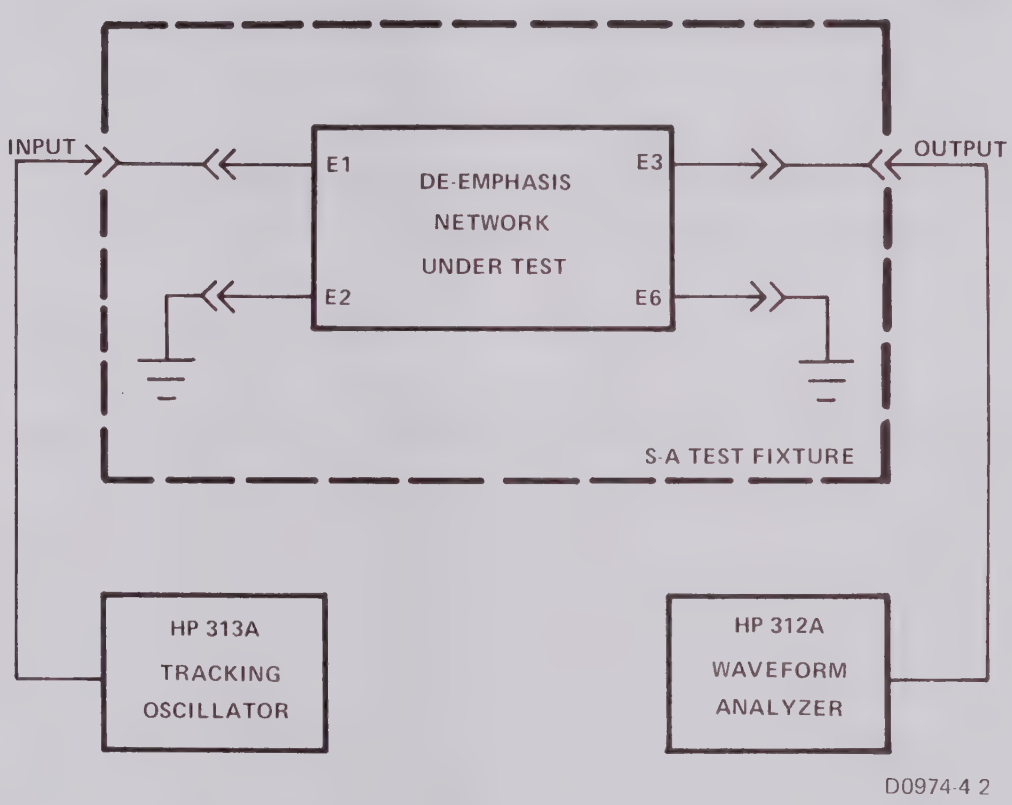

Figure 1. Test Setup

	SIZE	CODE IDENT NO.	DRAWING NO.
	A	10110	134115
	SCALE	REV	SHEET 5

TEST DATA SHEET

De-Emphasis Network

P/N _____ S/N _____

Date _____ Technician _____

Approved _____

Ref Para

3.1-a Crossover Frequency (f_x) _____ kHz (table 1)

Resonant Frequency (f_r) _____ kHz (table 1)

(3.1-f)	Freq (kHz)	(3.1-f) Back-to-Back Deviation from Flat (dB)	(3.1-i) Level Change Relative to f_x (dB) Actual	Required
0.1 f_m	_____	_____	_____	3.85 ±0.05
0.2 f_m	_____	_____	_____	3.48 ±0.5
0.3 f_m	_____	_____	_____	2.89 ±0.05
0.4 f_m	_____	_____	_____	2.11 ±0.05
0.5 f_m	_____	_____	_____	1.18 ±0.05
f_x	_____	_____	_____	0.0
0.7 f_m	_____	_____	_____	-0.96 ±0.05
0.8 f_m	_____	_____	_____	-2.07 ±0.05
0.9 f_m	_____	_____	_____	-3.12 ±0.05
f_m	_____	_____	_____	-4.01 ±0.05

PARTS LIST

ASSEMBLY E131612 RX BASEBAND AMPLIFIER MODEL 411

ITEM	COMPONENT	DESCRIPTION	FSCM	MFR PART NUMBER
	0132308	SCHEMATIC DIAGRAM BASEBAND AMPLIFIER		
1	0131611	PW BOARD ASSY RX BASEBAND AMPLIFIER		
2	0127195	CHASSIS		
3	0090723	COVER,LOWER DECK MODULE SERIES 400		
4	0131723	PANEL,FRONT BASEBAND AMPLIFIER RX		
5	0090724	REAR PANEL,SINGLE WIDTH LWR DECK MODULE		
6	0078535	CONN CONTACT FEMALE CRIMP NO. 24 WIRE	09922	RC24M-9
7	0081155	NUT ESNA 4-40 MINI HEX INSRT BRSS CD PLT	72962	92-1660-40
8	0078532	CONN CONTACT MALE COAX CRIMP .1 D CABLE	09922	RCDXK-1
9	0079007	SCREW 4-40 X 1/8 F HD,100 DEG,SST		BY DESCRIPTION
10	0078988	SCREW 4-40 X 3/16 F HD,100 DEG,SST		PER MS24693-C1
11	0057444	NUT CLAMPING 1/4-32 THD	10110	57444
12	0080605	WASHER 1/4 LOCK, INT TOOTH, NI PLT STL	01121	M4748
13	0129988	SLEEVE 1/2 DIA SWITCH MTG USE WITH 57444		
14	0078985	SCREW 2-56 X 3/16 F HD,100 DEG,SST		BY DESCRIPTION
15	0078335	CABLE COAX 75 OHM MIN 0.110 OD	07145	RG187A/U
16	0153342	LABEL CHANNEL CAPACITY INDICATING		
17	0153488	LABEL CHANNEL CAPACITY-FRONT PANEL MTG		
A1	0131821	PW BOARD ASSY VIDEO PLUG-IN AMPL		
A2	0131824	BOARD ASSEMBLY DE-EMPHASIS NETWORK		
A3	0132364	PW BOARD ASSY HIGHPASS BASEBAND FILTER		
A4	0131821	PW BOARD ASSY VIDEO PLUG-IN AMPL		
J1	0078531	CONN RECT BODY W/C CONTACTS 20 POS PLUG	09922	MS20PM-61
R101	0071688	POT 100 OHM 1/2W CCMP PNL MT LOCKING	01121	GA2L040S101UC
R102	0075628	RESISTOR 300 OHM 1/4W 5% CCMP	01121	RCR07G301JS
S101	0082829	SWITCH RCT 2P 2 POS NSH 1 SEC 60 DEG	01686	SW 1891-1

PARTS LIST

ASSEMBLY E131611 PW BOARD ASSY RX BASEBAND AMPLIFIER

ITEM	COMPONENT	DESCRIPTION	FSCM	MFR PART NUMBER
	0132308	SCHEMATIC DIAGRAM BASEBAND AMPLIFIER		
	0144021	INSTALLATION TOOL SET FOR PART NO. 81632		
1	0132349	PRINTED WIRING BOARD BASEBAND AMPLIFIER		
2	0072879	STANDOFF 2-56 ID 1/8 HT SWAGE CD P BRSS	71279	350-2188-09-07-00
C1	0082405	CAPACITR 330 MF 6V SOLID TANT PCL	05397	T362D337K006AS
C2	0082405	CAPACITR 330 MF 6V SOLID TANT PCL	05397	T362D337K006AS
C3	0073495	CAPACITR 39 PF 500V SILVER MICA 5%	14655	CD15ED390J03
C4	0073495	CAPACITR 39 PF 500V SILVER MICA 5%	14655	CD15ED390J03
E1	0081632	SOCKET PIN .040 DIA CLOSED BOTTOM	71279	450-3704-01-01-01
E2	0081632	SOCKET PIN .040 DIA CLOSED BOTTOM	71279	450-3704-01-01-01
E3	0081632	SOCKET PIN .040 DIA CLOSED BOTTOM	71279	450-3704-01-01-01
E4	0081632	SOCKET PIN .040 DIA CLOSED BOTTOM	71279	450-3704-01-01-01
E5	0081632	SOCKET PIN .040 DIA CLOSED BOTTOM	71279	450-3704-01-01-01
E6	0081632	SOCKET PIN .040 DIA CLOSED BOTTOM	71279	450-3704-01-01-01
E7	0081632	SOCKET PIN .040 DIA CLOSED BOTTOM	71279	450-3704-01-01-01
E8	0081632	SOCKET PIN .040 DIA CLOSED BOTTOM	71279	450-3704-01-01-01
E9	0081632	SOCKET PIN .040 DIA CLOSED BOTTOM	71279	450-3704-01-01-01
E10	0081632	SOCKET PIN .040 DIA CLOSED BOTTOM	71279	450-3704-01-01-01
E11	0081632	SOCKET PIN .040 DIA CLOSED BOTTOM	71279	450-3704-01-01-01
E12	0081632	SOCKET PIN .040 DIA CLOSED BOTTOM	71279	450-3704-01-01-01
E13	0081632	SOCKET PIN .040 DIA CLOSED BOTTOM	71279	450-3704-01-01-01
E14	0081632	SOCKET PIN .040 DIA CLOSED BOTTOM	71279	450-3704-01-01-01
E15	0081632	SOCKET PIN .040 DIA CLOSED BOTTOM	71279	450-3704-01-01-01
E16	0081632	SOCKET PIN .040 DIA CLOSED BOTTOM	71279	450-3704-01-01-01
E17	0081632	SOCKET PIN .040 DIA CLOSED BOTTOM	71279	450-3704-01-01-01
E18	0081632	SOCKET PIN .040 DIA CLOSED BOTTOM	71279	450-3704-01-01-01
E19	0081632	SOCKET PIN .040 DIA CLOSED BOTTOM	71279	450-3704-01-01-01
E20	0081632	SOCKET PIN .040 DIA CLOSED BOTTOM	71279	450-3704-01-01-01
E21	0081632	SOCKET PIN .040 DIA CLOSED BOTTOM	71279	450-3704-01-01-01
E22	0081632	SOCKET PIN .040 DIA CLOSED BOTTOM	71279	450-3704-01-01-01
E23	0081632	SOCKET PIN .040 DIA CLOSED BOTTOM	71279	450-3704-01-01-01
E24	0081632	SOCKET PIN .040 DIA CLOSED BOTTOM	71279	450-3704-01-01-01
E25	0081632	SOCKET PIN .040 DIA CLOSED BOTTOM	71279	450-3704-01-01-01
E26	0081632	SOCKET PIN .040 DIA CLOSED BOTTOM	71279	450-3704-01-01-01
E27	0081632	SOCKET PIN .040 DIA CLOSED BOTTOM	71279	450-3704-01-01-01
E28	0081632	SOCKET PIN .040 DIA CLOSED BOTTOM	71279	450-3704-01-01-01
E29	0081632	SOCKET PIN .040 DIA CLOSED BOTTOM	71279	450-3704-01-01-01
E30	0081632	SOCKET PIN .040 DIA CLOSED BOTTOM	71279	450-3704-01-01-01
R1	0078600	NOT ASSIGNED		
R2	0078600	NOT ASSIGNED		
R3	0078600	NOT ASSIGNED		
R4	0077524	RESISTOR 75 OHM 1/4W 5% COMP	01121	RCR07G750JS
R5	0079895	RESISTOR 75.0 OHM RN60C 1% MTL FLM		RN60C75R0F
R6	0081732	RESISTOR 510 OHM 1/4W 5% COMP	01121	RCR07G511JS
R7	0079895	RESISTOR 75.0 OHM RN60C 1% MTL FLM		RN60C75R0F
R8	0079895	RESISTOR 75.0 OHM RN60C 1% MTL FLM		RN60C75R0F

PARTS LIST

ASSEMBLY E131821 PW BOARD ASSY VIDEO PLUG-IN AMPL

ITEM	COMPONENT	DESCRIPTION	FSCM	MFR PART NUMBER
	0132305	SCHEMATIC DIAGRAM BASEBAND PLUG-IN AMPL		
1	0131820	PW BOARD VIDEO PLUG-IN AMPL		
C1	0080139	CAPACITR .1 MF 50V CER MONO -20%+80%	72982	8131-050-651-104Z
C2	0080139	CAPACITR .1 MF 50V CER MONO -20%+80%	72982	8131-050-651-104Z
C3	0080139	CAPACITR .1 MF 50V CER MONO -20%+80%	72982	8131-050-651-104Z
C4	0079171	CAPACITR 9-35 PF MIN CER DISC PC MT	72982	538-011 D 9-35
C5	0078600	NOT ASSIGNED		
C6	0082921	CAPACITR 150 MF 15V SOLID TANT POL 10%	05397	T362D157KC15AS
C7	0078600	NOT ASSIGNED		
C8	0082921	CAPACITR 150 MF 15V SOLID TANT POL 10%	05397	T362D157KC15AS
CR1	0071142	DIODE 1N4154 SIL 25V 150MA	80368	1N4154
E1	0081849	PIN FOR .040 SOCKET CONTACT	91833	1218 MODIFIED, SILVER
E2	0081849	PIN FOR .040 SOCKET CONTACT	91833	1218 MODIFIED, SILVER
E3	0081849	PIN FOR .040 SOCKET CONTACT	91833	1218 MODIFIED, SILVER
E4	0081849	PIN FOR .040 SOCKET CONTACT	91833	1218 MODIFIED, SILVER
E5	0081849	PIN FOR .040 SOCKET CONTACT	91833	1218 MODIFIED, SILVER
E6	0081849	PIN FOR .040 SOCKET CONTACT	91833	1218 MODIFIED, SILVER
E7	0081849	PIN FOR .040 SOCKET CONTACT	91833	1218 MODIFIED, SILVER
E8	0081849	PIN FOR .040 SOCKET CONTACT	91833	1218 MODIFIED, SILVER
Q1	0077148	TRANSSTR 2N3251 PNP SIL	04713	2N3251
Q2	0077147	TRANSSTR 2N3947 NPN SIL	04713	2N3947
Q3	0078850	TRANSSTR 2N2219 NPN SIL	13715	2N2219
Q4	0078850	TRANSSTR 2N2219 NPN SIL	13715	2N2219
R1	0082648	POT 5K OHM 1/2W CER .30 DIA VERT ADJ 4T	80294	3339P-1-502
R2	0071977	RESISTOR 2.2K OHM 1/4W 10% COMP	01121	RCR07G222KS
R3	0078600	NOT ASSIGNED		
R4	0071993	RESISTOR 3.9K OHM 1/4W 10% COMP	01121	RCR07G392KS
R5	0072002	RESISTOR 4.7K OHM 1/4W 10% COMP	01121	RCR07G472KS
R6	0071951	RESISTOR 1.0K OHM 1/4W 10% COMP	01121	RCR07G102KS
R7	0078600	NOT ASSIGNED		
R8	0071973	RESISTOR 1.8K OHM 1/4W 10% COMP	01121	RCR07G182KS
R9	0075628	RESISTOR 300 OHM 1/4W 5% COMP	01121	RCR07G301JS
R10	0078248	RESISTOR 1.00K OHM RN60C 1% MTL FLM		RN60C1001F
R11	0071918	RESISTOR 330 OHM 1/4W 10% COMP	01121	RCR07G331KS
R12	0071951	RESISTOR 1.0K OHM 1/4W 10% COMP	01121	RCR07G102KS
R13	0071951	RESISTOR 1.0K OHM 1/4W 10% COMP	01121	RCR07G102KS
R14	0071876	RESISTOR 68 OHM 1/4W 10% COMP	01121	RCR07G680KS
R15	0071913	RESISTOR 270 OHM 1/4W 10% COMP	01121	RCR07G271KS
R16	0076283	RESISTOR 3.9 OHM 1/4W 10% COMP	01121	RCR07G3R9KS
R17	0076283	RESISTOR 3.9 OHM 1/4W 10% COMP	01121	RCR07G3R9KS

PARTS LIST

ASSEMBLY E132364 PW BOARD ASSY HIGHPASS BASEBAND FILTER

ITEM	COMPONENT	DESCRIPTION	FSCM	MFR PART NUMBER
	0132303	SCHEMATIC DIAG HIGHPASS BASEBAND FILTER		
1	0132372	PW BOARD HIGH PASS BASBAND FILTER		
C1	0082921	CAPACITR 150 MF 15V SOLID TANT POL 10%	05397	T362D157K015AS
C2	0082921	CAPACITR 150 MF 15V SOLID TANT POL 10%	05397	T362D157K015AS
C3	0082921	CAPACITR 150 MF 15V SOLID TANT POL 10%	05397	T362D157K015AS
C4	0082921	CAPACITR 150 MF 15V SOLID TANT POL 10%	05397	T362D157K015AS
C5	0082921	CAPACITR 150 MF 15V SOLID TANT POL 10%	05397	T362D157K015AS
C6	0076696	CAPACITR .01 MF 500V SILVER MICA 5%	14655	CD30FD103J03
C7	0076696	CAPACITR .01 MF 500V SILVER MICA 5%	14655	CD30FD103J03
C8	0082921	CAPACITR 150 MF 15V SOLID TANT POL 10%	05397	T362D157K015AS
C9	0076696	CAPACITR .01 MF 500V SILVER MICA 5%	14655	CD30FD103J03
C10	0076696	CAPACITR .01 MF 500V SILVER MICA 5%	14655	CD30FD103J03
C11	0081210	CAPACITR .01 MF 50V CER MONO X7R 10%	72982	8121-050-X7R-103K
C12	0081210	CAPACITR .01 MF 50V CER MONO X7R 10%	72982	8121-050-X7R-103K
C13	0081210	CAPACITR .01 MF 50V CER MONO X7R 10%	72982	8121-050-X7R-103K
C14	0081210	CAPACITR .01 MF 50V CER MONO X7R 10%	72982	8121-050-X7R-103K
E1	0081849	PIN FOR .040 SOCKET CONTACT	91833	1218 MODIFIED, SILVER
E2	0081849	PIN FOR .040 SOCKET CONTACT	91833	1218 MODIFIED, SILVER
E3	0081849	PIN FOR .040 SOCKET CONTACT	91833	1218 MODIFIED, SILVER
E4	0081849	PIN FOR .040 SOCKET CONTACT	91833	1218 MODIFIED, SILVER
E5	0081849	PIN FOR .040 SOCKET CONTACT	91833	1218 MODIFIED, SILVER
E6	0081849	PIN FOR .040 SOCKET CONTACT	91833	1218 MODIFIED, SILVER
E7	0081849	PIN FOR .040 SOCKET CONTACT	91833	1218 MODIFIED, SILVER
E8	0081849	PIN FOR .040 SOCKET CONTACT	91833	1218 MODIFIED, SILVER
Q1	0083032	TRANSSTR 2N2222A NPN SIL		2N2222A
Q2	0083032	TRANSSTR 2N2222A NPN SIL		2N2222A
Q3	0083032	TRANSSTR 2N2222A NPN SIL		2N2222A
R1	0071862	RESISTOR 47 OHM 1/4W 10% COMP	01121	RCR07G470KS
R2	0077524	RESISTOR 75 OHM 1/4W 5% COMP	01121	RCR07G750JS
R3	0071862	RESISTOR 47 OHM 1/4W 10% COMP	01121	RCR07G470KS
R4	0071906	RESISTOR 1.5K OHM 1/4W 10% COMP	01121	RCR07G152KS
R5	0082105	RESISTOR 2.05K OHM RN60C 1% MTL FLM		RN60C2051F
R6	0082134	RESISTOR 17.8K OHM RN60C 1% MTL FLM		RN60C1782F
R7	0071897	RESISTOR 150 OHM 1/4W 10% COMP	01121	RCR07G151KS
R8	0071906	RESISTOR 1.5K OHM 1/4W 10% COMP	01121	RCR07G152KS
R9	0073905	RESISTOR 4.87K OHM RN60C 1% MTL FLM		RN60C4871F
R10	0078600	NOT ASSIGNED		
R11	0082152	RESISTOR 82.5K OHM RN60C 1% MTL FLM		RN60C8252F
R12	0076908	RESISTOR 6.98K OHM RN60D 1% MTL FLM		RN60D6981F
R13	0071897	RESISTOR 150 OHM 1/4W 10% COMP	01121	RCR07G151KS
R14	0071906	RESISTOR 1.5K OHM 1/4W 10% COMP	01121	RCR07G152KS
R15	0077524	RESISTOR 75 OHM 1/4W 5% COMP	01121	RCR07G750JS
R16	0071897	RESISTOR 150 OHM 1/4W 10% COMP	01121	RCR07G151KS

PARTS LIST

ASSEMBLY E141442 PW BOARD ASSY 12 CHAN DE-EMPHASIS NTWK

ITEM	COMPONENT	DESCRIPTION	FSCM	MFR PART NUMBER
	0131668	SCHEM DIAG DE-EMPHASIS NETWORK		
	0131824	BOARD ASSEMBLY DE-EMPHASIS NETWORK		
1	0132347	PRINTED WIRING BOARD DE-EMPHASIS		
C1	0082974	CAPACITR .01 MF 500V SILVER MICA 1%	53021	D305F103F03
C2	0080769	CAPACITR .0091 MF 100V SILVER MICA 1%	53021	D201C912F03
C3	0078803	CAPACITR 150 PF 500V SILVER MICA 1%	53021	D155C151F03
C4	0084442	CAPACITR .033 MF 100V SILVER MICA 1%	53021	D301E333F03
C5	0082972	CAPACITR .0082 MF 500V SILVER MICA 1%	53021	D305F822F03
C6	0082401	CAPACITR 400 PF 500V SILVER MICA 1%	53021	D155C401F03
E1	0081849	PIN FOR .040 SOCKET CONTACT	91833	1218 MODIFIED, SILVER
E2	0081849	PIN FOR .040 SOCKET CONTACT	91833	1218 MODIFIED, SILVER
E3	0081849	PIN FOR .040 SOCKET CONTACT	91833	1218 MODIFIED, SILVER
E4	0081849	PIN FOR .040 SOCKET CONTACT	91833	1218 MODIFIED, SILVER
E5	0081849	PIN FOR .040 SOCKET CONTACT	91833	1218 MODIFIED, SILVER
E6	0081849	PIN FOR .040 SOCKET CONTACT	91833	1218 MODIFIED, SILVER
L1	0084443	INDUCTOR 217 UH PC MT RANGE +-20 UH	04213	CB6541-46
L2	0082991	INDUCTOR 112 UH PC MT RANGE +-5%	04213	CB6541-31
R1	0082075	RESISTOR 95.3 OHM RN60C 1% MTL FLM		RN60C95R3F
R2	0082064	RESISTOR 40.2 OHM RN60D 1% MTL FLM		RN60D40R2F
R3	0079895	RESISTOR 75.0 OHM RN60C 1% MTL FLM		RN60C75R0F
R4	0079895	RESISTOR 75.0 OHM RN60C 1% MTL FLM		RN60C75R0F
R5	0082993	RESISTOR 41.2 OHM RN60C 1% MTL FLM		RN60C41R2F
R6	0082048	RESISTOR 16.9 OHM RN60D 1% MTL FLM		RN60D16R9F
R7	0082080	RESISTOR 154 OHM RN60C 1% MTL FLM		RN60C154F
R8	0082048	RESISTOR 16.9 OHM RN60D 1% MTL FLM		RN60D16R9F

PARTS LIST

ASSEMBLY 0141442 PW BOARD ASSY 12 CHAN DE-EMPHASIS NTWK

ITEM	COMPONENT	DESCRIPTION	FSCM	MFR PART NUMBER
	0131663	SCHEM DIAG DE-EMPHASIS NETWORK		
	0131824	BOARD ASSEMBLY DE-EMPHASIS NETWORK		
1	0132347	PRINTED WIRING BOARD DE-EMPHASIS		
C1	0082974	CAPACITR .01 MF 500V SILVER MICA 1%	53021	D305F103F0
C2	0080769	CAPACITR .0091 MF 100V SILVER MICA 1%	84171	DM20-912F
C3	0079803	CAPACITR 150 PF 500V SILVER MICA 1%	84171	DM-15-151F
C4	0084442	CAPACITR .033 MF 100V SILVER MICA 1%	53021	D301E333J0
C5	0082972	CAPACITR .0082 MF 500V SILVER MICA 1%	53021	D305F822F0
C6	0082401	CAPACITR 400 PF 500V SILVER MICA 1%	84171	DM-15-401F
E1	0081849	PIN FOR .040 SOCKET CONTACT	91833	1218 MODIFIED, SILVER
E2	0081849	PIN FOR .040 SOCKET CONTACT	91833	1218 MODIFIED, SILVER
E3	0081849	PIN FOR .040 SOCKET CONTACT	91833	1218 MODIFIED, SILVER
E4	0081849	PIN FOR .040 SOCKET CONTACT	91833	1218 MODIFIED, SILVER
E5	0081849	PIN FOR .040 SOCKET CONTACT	91833	1218 MODIFIED, SILVER
E6	0081849	PIN FOR .040 SOCKET CONTACT	91833	1218 MODIFIED, SILVER
L1	0084449	INDUCTOR 217 UH PC MT RANGE +-20 UH	04213	CB6541-46
L2	0082991	INDUCTOR 112 UH PC MT RANGE +-5%	04213	CB6541-31
R1	0082075	RESISTOR 95.3 OHM RN60C 1% MTL FLM		RN60C95R3F
R2	0082064	RESISTOR 40.2 OHM RN60D 1% MTL FLM		RN60D40R2F
R3	0079995	RESISTOR 75.0 OHM RN60C 1% MTL FLM		RN60C75R0F
R4	0079895	RESISTOR 75.0 OHM RN60C 1% MTL FLM		RN60C75R0F
R5	0082993	RESISTOR 41.2 OHM RN60C 1% MTL FLM		RN60C41R2F
R6	0082048	RESISTOR 16.9 OHM RN60D 1% MTL FLM		RN60D16R9F
R7	0082080	RESISTOR 154 OHM RN60C 1% MTL FLM		RN60C1540F
R8	0082048	RESISTOR 16.9 OHM RN60D 1% MTL FLM		RN60D16R9F

PARTS LIST

ASSEMBLY E131705 PW BOARD ASSY 24 CHAN DE-EMPHASIS NTWK

ITEM	COMPONENT	DESCRIPTION	FSCM	MFR PART NUMBER
	0131668	SCHEM DIAG DE-EMPHASIS NETWORK		
	0131824	BOARD ASSEMBLY DE-EMPHASIS NETWORK		
	0132347	PRINTED WIRING BOARD DE-EMPHASIS		
C1	0082974	CAPACITR .01 MF 500V SILVER MICA 1%	53021	D305F103F03
C2	0082967	CAPACITR 700 PF 300V SILVER MICA 1%		
C3	0078600	NOT ASSIGNED		
C4	0082974	CAPACITR .01 MF 500V SILVER MICA 1%	53021	D305F103F03
C5	0082974	CAPACITR .01 MF 500V SILVER MICA 1%	53021	D305F103F03
C6	0082971	CAPACITR .0031 MF 500V SILVER MICA 1%		
E1	0081849	PIN FOR .040 SOCKET CONTACT	91833	1218 MODIFIED, SILVER
E2	0081849	PIN FOR .040 SOCKET CONTACT	91833	1218 MODIFIED, SILVER
E3	0081849	PIN FOR .040 SOCKET CONTACT	91833	1218 MODIFIED, SILVER
E4	0081849	PIN FOR .040 SOCKET CONTACT	91833	1218 MODIFIED, SILVER
E5	0081849	PIN FOR .040 SOCKET CONTACT	91833	1218 MODIFIED, SILVER
E6	0081849	PIN FOR .040 SOCKET CONTACT	91833	1218 MODIFIED, SILVER
L1	0082992	INDUCTOR 130 UH PC MT RANGE +-5%	04213	CB6541-32
L2	0082989	INDUCTOR 60.0 UH PC MT RANGE +-5%	04213	CB6541-29
R1	0082075	RESISTOR 95.3 OHM RN60C 1% MTL FLM		RN60C95R3F
R2	0082064	RESISTOR 40.2 OHM RN60D 1% MTL FLM		RN60D40R2F
R3	0079895	RESISTOR 75.0 OHM RN60C 1% MTL FLM		RN60C75R0F
R4	0079895	RESISTOR 75.0 OHM RN60C 1% MTL FLM		RN60C75R0F
R5	0082993	RESISTOR 41.2 OHM RN60C 1% MTL FLM		RN60C41R2F
R6	0082048	RESISTOR 16.9 OHM RN60D 1% MTL FLM		RN60D16R9F
R7	0082080	RESISTOR 154 OHM RN60C 1% MTL FLM		RN60C154OF
R8	0082048	RESISTOR 16.9 OHM RN60D 1% MTL FLM		RN60D16R9F

PARTS LIST

ASSEMBLY E131706 PW BOARD ASSY 36 CHAN DE-EMPHASIS NTWK

ITEM	COMPONENT	DESCRIPTION	FSCM	MFR PART NUMBER
	0131668	SCHEM DIAG DE-EMPHASIS NETWORK		
	0131824	BOARD ASSEMBLY DE-EMPHASIS NETWORK		
1	0132347	PRINTED WIRING BOARD DE-EMPHASIS		
C1	0082975	CAPACITR .00452 MF 500V MOLDED SIL M 1%		
C2	0082970	CAPACITR .0024 MF 500V SILVER MICA 1%	53021	D205F242F03
C3	0078819	CAPACITR 470 PF 500V SILVER MICA 1%	53021	D155C471F03
C4	0082975	CAPACITR .00452 MF 500V MOLDED SIL M 1%		
C5	0082974	CAPACITR .01 MF 500V SILVER MICA 1%	53021	D305F103F03
C6	0082970	CAPACITR .0024 MF 500V SILVER MICA 1%	53021	D205F242F03
E1	0081849	PIN FOR .040 SOCKET CONTACT	91833	1218 MODIFIED, SILVER
E2	0081849	PIN FOR .040 SOCKET CONTACT	91833	1218 MODIFIED, SILVER
E3	0081849	PIN FOR .040 SOCKET CONTACT	91833	1218 MODIFIED, SILVER
E4	0081849	PIN FOR .040 SOCKET CONTACT	91833	1218 MODIFIED, SILVER
E5	0081849	PIN FOR .040 SOCKET CONTACT	91833	1218 MODIFIED, SILVER
E6	0081849	PIN FOR .040 SOCKET CONTACT	91833	1218 MODIFIED, SILVER
L1	0084448	INDUCTOR 83.0 UH PC MT RANGE +-8 UH	04213	CB6541-47
L2	0082986	INDUCTOR 40.3 UH PC MT RANGE +-5%	04213	CB6541-33
R1	0082075	RESISTOR 95.3 OHM RN60C 1% MTL FLM		RN60C95R3F
R2	0082064	RESISTOR 40.2 OHM RN60D 1% MTL FLM		RN60D40R2F
R3	0079895	RESISTOR 75.0 OHM RN60C 1% MTL FLM		RN60C75R0F
R4	0079895	RESISTOR 75.0 OHM RN60C 1% MTL FLM		RN60C75R0F
R5	0082993	RESISTOR 41.2 OHM RN60C 1% MTL FLM		RN60C41R2F
R6	0082048	RESISTOR 16.9 OHM RN60D 1% MTL FLM		RN60D16R9F
R7	0082080	RESISTOR 154 OHM RN60C 1% MTL FLM		RN60C154OF
R8	0082048	RESISTOR 16.9 OHM RN60D 1% MTL FLM		RN60D16R9F

PARTS LIST

ASSEMBLY E141443 PW BOARD ASSY 48 CHAN DE-EMPHASIS NTWK

ITEM	COMPONENT	DESCRIPTION	FSCM	MFR PART NUMBER
	0131668	SCHEM DIAG DE-EMPHASIS NETWORK		
	0131824	BOARD ASSEMBLY DE-EMPHASIS NETWORK		
1	0132347	PRINTED WIRING BOARD DE-EMPHASIS		
C1	0078829	CAPACITR .002595 MF 500V SILVER MICA 1%	53021	D195CXXXF03 2595 PF
C2	0078829	CAPACITR .002595 MF 500V SILVER MICA 1%	53021	D195CXXXF03 2595 PF
C3	0078819	CAPACITR 470 PF 500V SILVER MICA 1%	53021	D155C471F03
C4	0082974	CAPACITR .01 MF 500V SILVER MICA 1%	53021	D305F103F03
C5	0080767	CAPACITR .002 MF 500V SILVER MICA 1%	53021	D195C202F03
C6	0078809	CAPACITR 230 PF 500V SILVER MICA 1%	53021	D155C231F03
E1	0081849	PIN FOR .040 SOCKET CONTACT	91833	1218 MODIFIED, SILVER
E3	0081849	PIN FOR .040 SOCKET CONTACT	91833	1218 MODIFIED, SILVER
E4	0081849	PIN FOR .040 SOCKET CONTACT	91833	1218 MODIFIED, SILVER
E5	0081849	PIN FOR .040 SOCKET CONTACT	91833	1218 MODIFIED, SILVER
E6	0081849	PIN FOR .040 SOCKET CONTACT	91833	1218 MODIFIED, SILVER
E22	0081849	PIN FOR .040 SOCKET CONTACT	91833	1218 MODIFIED, SILVER
L1	0082990	INDUCTOR 70.0 UH PC MT RANGE +-5%	04213	CB6541-30
L2	0082985	INDUCTOR 29.9 UH PC MT RANGE +-10%	04213	CB6541-26
R1	0082075	RESISTOR 95.3 OHM RN60C 1% MTL FLM		RN60C95R3F
R2	0082064	RESISTOR 40.2 OHM RN60D 1% MTL FLM		RN60D40R2F
R3	0079895	RESISTOR 75.0 OHM RN60C 1% MTL FLM		RN60C75R0F
R4	0079895	RESISTOR 75.0 OHM RN60C 1% MTL FLM		RN60C75R0F
R5	0082993	RESISTOR 41.2 OHM RN60C 1% MTL FLM		RN60C41R2F
R6	0082048	RESISTOR 16.9 OHM RN60D 1% MTL FLM		RN60D16R9F
R7	0082080	RESISTOR 154 OHM RN60C 1% MTL FLM		RN60C154F
R8	0082048	RESISTOR 16.9 OHM RN60D 1% MTL FLM		RN60D16R9F

PARTS LIST

ASSEMBLY E141433 Pw BOARD ASSY, 120 CHANNEL LOOP FILTER

ITEM	COMPONENT	DESCRIPTION	FSCM	MFR PART NUMBER
	0143574	SCHEMATIC DIAG., 012-432 CH. LOOP FILTER		
	0143575	Pw BOARD ASSY, 24-432 CH. TEU LOOP FILT.		
1	0143572	Pw BOARD, 012-432 CH. LOOP FILTER		
A11	0078700	FACTORY SELECTED VALUE		
AT2	0078700	FACTORY SELECTED VALUE		
C1	0078976	CAPACITR 15-60 PF MIN CER DISC PC MT	72982	538-011 F 15-60
C2	0079172	CAPACITR 5.5-18 PF MIN CER DISC PC MT	72982	538-011 A 5.5-18
C3	0073495	CAPACITR 39 PF 500V SILVER MICA 5%	14655	CD15ED390J03
C4	0070470	CAPACITR 10 PF 500V SILVER MICA 5%	14655	CD15CD100J03
C5	0070470	CAPACITR 10 PF 500V SILVER MICA 5%	14655	CD15CD100J03
C6	0075193	CAPACITR .001 MF 500V SILVER MICA 5%	14655	CD19FD102J03
C7	0081098	CAPACITR .47 MF 50V CER MONO 20%	72982	8131-050-651-474M
C8	0081098	CAPACITR .47 MF 50V CER MONO 20%	72982	8131-050-651-474M
C9	0035656	CAPACITR 100 MF 20V SOLID TANT POL 10%	05397	T362D107K020AS
C10	0081098	CAPACITR .47 MF 50V CER MONO 20%	72982	8131-050-651-474M
C11	0035656	CAPACITR 100 MF 20V SOLID TANT POL 10%	05397	T362D107K020AS
C12	0081098	CAPACITR .47 MF 50V CER MONO 20%	72982	8131-050-651-474M
CR1	0084467	DIODE MV109 VARACTOR SIL	04713	MV109
CR2	0084467	DIODE MV109 VARACTOR SIL	04713	MV109
CR3	0084467	DIODE MV109 VARACTOR SIL	04713	MV109
CR4	0084467	DIODE MV109 VARACTOR SIL	04713	MV109
E1	0081849	PIN FOR .040 SOCKET CONTACT	91833	1218 MODIFIED, SILVER
E2	0081849	PIN FOR .040 SOCKET CONTACT	91833	1218 MODIFIED, SILVER
E3	0081849	PIN FOR .040 SOCKET CONTACT	91833	1218 MODIFIED, SILVER
E4	0081849	PIN FOR .040 SOCKET CONTACT	91833	1218 MODIFIED, SILVER
E5	0081849	PIN FOR .040 SOCKET CONTACT	91833	1218 MODIFIED, SILVER
E6	0081849	PIN FOR .040 SOCKET CONTACT	91833	1218 MODIFIED, SILVER
E7	0081849	PIN FOR .040 SOCKET CONTACT	91833	1218 MODIFIED, SILVER
E8	0081849	PIN FOR .040 SOCKET CONTACT	91833	1218 MODIFIED, SILVER
E9	0081849	PIN FOR .040 SOCKET CONTACT	91833	1218 MODIFIED, SILVER
E10	0082909	TERMINAL PRESS MT DISCONNECT .058 PIN	00779	60599-1
E11	0082909	TERMINAL PRESS MT DISCONNECT .058 PIN	00779	60599-1
E12	0082909	TERMINAL PRESS MT DISCONNECT .058 PIN	00779	60599-1
L1	0083463	INDUCTOR 7 1/2T #24 6-32X1/4 IN. CARB J	02113	V1540
L2	0083463	INDUCTOR 7 1/2T #24 6-32X1/4 IN. CARB J	02113	V1540
L3	0081082	INDUCTOR .12 CH SUBMIN UNSHLD 10%	91637	IR-2

PARTS LIST - continued

ASSEMBLY 141433 PW BOARD ASSY, 120 CHANNEL LOOP FILTER

ITEM	COMPONENT	DESCRIPTION	FSCM	MFR PART NUMBER
L4	0079167	INDUCTOR .33 UH SUBMIN UNSHLD 10%	91637	IR-2
L5	0078600	NOT ASSIGNED		
L6	0077670	INDUCTOR 33 UH SUBMIN UNSHLD 10%	91637	IR-2
Q1	0077147	TRANSSTR 2N3947 NPN SIL	04713	2N3947
Q2	0077147	TRANSSTR 2N3947 NPN SIL	04713	2N3947
R1	0071937	RESISTOR 680 OHM 1/4W 5% COMP	01121	RCR07G681JS
R2	0075551	RESISTOR 10 OHM 1/4W 5% COMP	01121	RCR07G100JS
R3	0075650	RESISTOR 1.8K OHM 1/4W 5% COMP	01121	RCR07G182JS
R4	0074710	RESISTOR 2.2K OHM 1/4W 5% COMP	01121	RCR07G222JS
R5	0074696	RESISTOR 470 OHM 1/4W 5% COMP	01121	RCR07G471JS
R6	0062048	POT 5K OHM 1/2W CER .30 DIA VERT ADJ 4T	80294	3339P-1-502
R7	0078723	POT 10K OHM 1/2W CER 3/8 DIA VERT ADJ	01121	SV1031
R8	0074710	RESISTOR 2.2K OHM 1/4W 5% COMP	01121	RCR07G222JS
R9	0074722	RESISTOR 4.7K OHM 1/4W 5% COMP	01121	RCR07G472JS
R10	0078938	RESISTOR 68 OHM 1/4W 5% COMP	01121	RCR07G680JS
T1	0142237	TRANSFORMER, 4-1 IMPEDANCE MATCHING		
T2	0142237	TRANSFORMER, 4-1 IMPEDANCE MATCHING		
W1	0143624	JUMPER WIRE ASSY		
XAT1	0081666	SOCKET TO-5 CASE 3-PIN	06776	SD5173
XAT2	0081666	SOCKET TO-5 CASE 3-PIN	06776	SD5173

PARTS LIST

ASSEMBLY E131707 PW BOARD ASSY 6C CHAN DE-EMPHASIS NTWK

ITEM	COMPONENT	DESCRIPTION	FSCM	MFR PART NUMBER
	0131668	SCHEM DIAG DE-EMPHASIS NETWORK		
	0131824	BOARD ASSEMBLY DE-EMPHASIS NETWORK		
1	0132347	PRINTED WIRING BOARD DE-EMPHASIS		
C1	0082975	CAPACITR .00452 MF 500V MOLDED SIL M 1%		
C2	0077659	CAPACITR 62 PF 500V SILVER MICA 5%	14655	CD6ED620J03
C3	0078600	NOT ASSIGNED		
C4	0082973	CAPACITR .0099 MF 500V SILVER MICA 1%		
C5	0078600	NOT ASSIGNED		
C6	0078600	NOT ASSIGNED		
E1	0081849	PIN FOR .040 SOCKET CONTACT	91833	1218 MODIFIED, SILVER
E2	0081849	PIN FOR .040 SOCKET CONTACT	91833	1218 MODIFIED, SILVER
E3	0081849	PIN FOR .040 SOCKET CONTACT	91833	1218 MODIFIED, SILVER
E4	0081849	PIN FOR .040 SOCKET CONTACT	91833	1218 MODIFIED, SILVER
E5	0081849	PIN FOR .040 SOCKET CONTACT	91833	1218 MODIFIED, SILVER
E6	0081849	PIN FOR .040 SOCKET CONTACT	91833	1218 MODIFIED, SILVER
L1	0082983	INDUCTOR 55.7 UH PC MT RANGE +-5%	04213	CB6541-28
L2	0082984	INDUCTOR 25.8 UH PC MT RANGE +-10%	04213	CB6541-25
R1	C082075	RESISTOR 95.3 OHM RN60C 1% MTL FLM		RN60C95R3F
R2	C082064	RESISTOR 40.2 OHM RN60D 1% MTL FLM		RN60D40R2F
R3	0079895	RESISTOR 75.0 OHM RN60C 1% MTL FLM		RN60C75R0F
R4	C079895	RESISTOR 75.0 OHM RN60C 1% MTL FLM		RN60C75R0F
R5	0082993	RESISTOR 41.2 OHM RN60C 1% MTL FLM		RN60C41R2F
R6	0082048	RESISTOR 16.9 OHM RN60D 1% MTL FLM		RN60D16R9F
R7	0082080	RESISTOR 154 OHM RN60C 1% MTL FLM		RN60C154OF
R8	0082048	RESISTOR 16.9 OHM RN60D 1% MTL FLM		RN60D16R9F

PARTS LIST

ASSEMBLY E131708 PW BOARD ASSY 72 CHAN DE-EMPHASIS NTWK

ITEM	COMPONENT	DESCRIPTION	FSCM	MFR PART NUMBER
	0131668	SCHEM DIAG DE-EMPHASIS NETWORK		
	0131824	BOARD ASSEMBLY DE-EMPHASIS NETWORK		
1	0132347	PRINTED WIRING BOARD DE-EMPHASIS		
C1	0082971	CAPACITR .0031 MF 500V SILVER MICA 1%		
C2	0082967	CAPACITR 700 PF 300V SILVER MICA 1%		
C3	0070498	CAPACITR 47 PF 500V SILVER MICA 5%	14655	CD15ED470J03
C4	0082972	CAPACITR .0082 MF 500V SILVER MICA 1%	53021	D305F822F03
C5	0030922	CAPACITR 120 PF 500V SILVER MICA 1%	53021	D155C121F03
C6	0076600	NOT ASSIGNED		
E1	0081849	PIN FOR .040 SOCKET CONTACT	91833	1218 MODIFIED, SILVER
E2	0081849	PIN FOR .040 SOCKET CONTACT	91833	1218 MODIFIED, SILVER
E3	0081849	PIN FOR .040 SOCKET CONTACT	91833	1218 MODIFIED, SILVER
E4	0081849	PIN FOR .040 SOCKET CONTACT	91833	1218 MODIFIED, SILVER
E5	0081849	PIN FOR .040 SOCKET CONTACT	91833	1218 MODIFIED, SILVER
E6	0081849	PIN FOR .040 SOCKET CONTACT	91833	1218 MODIFIED, SILVER
L1	0082987	INDUCTOR 48.0 UH PC MT RANGE +-5%	04213	CB6541-27
L2	0082982	INDUCTOR 21.9 UH PC MT RANGE +-10%	04213	CB6541-23
R1	0082075	RESISTOR 95.3 OHM RN60C 1% MTL FLM		RN60C95R3F
R2	0082064	RESISTOR 40.2 OHM RN60D 1% MTL FLM		RN60D40R2F
R3	0079995	RESISTOR 75.0 OHM RN60C 1% MTL FLM		RN60C75R0F
R4	0079895	RESISTOR 75.0 OHM RN60C 1% MTL FLM		RN60C75R0F
R5	0082993	RESISTOR 41.2 OHM RN60C 1% MTL FLM		RN60C41R2F
R6	0082045	RESISTOR 16.9 OHM RN60D 1% MTL FLM		RN60D16R9F
R7	0082080	RESISTOR 154 OHM RN60C 1% MTL FLM		RN60C154F
R8	0082048	RESISTOR 16.9 OHM RN60D 1% MTL FLM		RN60D16R9F

PARTS LIST

ASSEMBLY E141444 PW BOARD ASSY 84 CHAN DE-EMPHASIS NTWK

ITEM	COMPONENT	DESCRIPTION	FSCM	MFR PART NUMBER
	0131668	SCHEM DIAG DE-EMPHASIS NETWORK		
	0131824	BOARD ASSEMBLY DE-EMPHASIS NETWORK		
1	0132347	PRINTED WIRING BOARD DE-EMPHASIS		
C1	0082971	CAPACITR .0031 MF 500V SILVER MICA 1%		
C2	0081826	CAPACITR 110 PF 100V SILVER MICA 2%	53021	D151C111G03
C3	0078600	NOT ASSIGNED		
C4	0070562	CAPACITR .0062 MF 500V MOLD. SIL MICA 1%	53021	CM30E622F
C5	0082402	CAPACITR 680 PF 500V SILVER MICA 1%	53021	D155C681F03
C6	0077965	CAPACITR 51 PF 500V SILVER MICA 2%	14655	CD6ED510G03
E1	0081849	PIN FOR .040 SOCKET CONTACT	91833	1218 MODIFIED, SILVER
E2	0081849	PIN FOR .040 SOCKET CONTACT	91833	1218 MODIFIED, SILVER
E3	0081849	PIN FOR .040 SOCKET CONTACT	91833	1218 MODIFIED, SILVER
E4	0081849	PIN FOR .040 SOCKET CONTACT	91833	1218 MODIFIED, SILVER
E5	0081849	PIN FOR .040 SOCKET CONTACT	91833	1218 MODIFIED, SILVER
E6	0081849	PIN FOR .040 SOCKET CONTACT	91833	1218 MODIFIED, SILVER
L1	0082936	INDUCTOR 40.3 UH PC MT RANGE +-5%	04213	CB6541-33
L2	0084444	INDUCTOR 18.0 UH PC MT RANGE +-1.5 UH	04213	CB6541-49
R1	0082075	RESISTOR 95.3 OHM RN60C 1% MTL FLM		RN60C95R3F
R2	0082064	RESISTOR 40.2 OHM RN60D 1% MTL FLM		RN60D40R2F
R3	0079895	RESISTOR 75.0 OHM RN60C 1% MTL FLM		RN60C75R0F
R4	0079895	RESISTOR 75.0 OHM RN60C 1% MTL FLM		RN60C75R0F
R5	0082993	RESISTOR 41.2 OHM RN60C 1% MTL FLM		RN60C41R2F
R6	0082048	RESISTOR 16.9 OHM RN60D 1% MTL FLM		RN60D16R9F
R7	0082080	RESISTOR 154 OHM RN60C 1% MTL FLM		RN60C154F
R8	0082048	RESISTOR 16.9 OHM RN60D 1% MTL FLM		RN60D16R9F

PARTS LIST

ASSEMBLY E131709 PW BOARD ASSY 96 CHAN DE-EMPHASIS NTWK

ITEM	COMPONENT	DESCRIPTION	FSCM	MFR PART NUMBER
	0131668	SCHEM DIAG DE-EMPHASIS NETWORK		
	0131824	BOARD ASSEMBLY DE-EMPHASIS NETWORK		
1	0132347	PRINTED WIRING BOARD DE-EMPHASIS		
C1	0080767	CAPACITR .002 MF 500V SILVER MICA 1%	53021	D195C202F03
C2	0080144	CAPACITR 430 PF 500V SILVER MICA 1%	53021	D155C431F03
C3	0082401	CAPACITR 400 PF 500V SILVER MICA 1%	53021	D155C401F03
C4	0070559	CAPACITR .0051 MF 300V SILVER MICA 1%	14655	CD19FD512F03
C5	0078828	CAPACITR .00101 MF 500V SILVER MICA 1%	53021	D195CXXXF03 1010 PF
C6	0073490	CAPACITR 5 PF 500V SILVER MICA +-.5PF	14655	CD15CD050D03
E1	0081849	PIN FOR .040 SOCKET CONTACT	91833	1218 MODIFIED, SILVER
E2	0081849	PIN FOR .040 SOCKET CONTACT	91833	1218 MODIFIED, SILVER
E3	0081849	PIN FOR .040 SOCKET CONTACT	91833	1218 MODIFIED, SILVER
E4	0081849	PIN FOR .040 SOCKET CONTACT	91833	1218 MODIFIED, SILVER
E5	0081849	PIN FOR .040 SOCKET CONTACT	91833	1218 MODIFIED, SILVER
E6	0081849	PIN FOR .040 SOCKET CONTACT	91833	1218 MODIFIED, SILVER
L1	0084447	INDUCTOR 35.0 UH PC MT RANGE +-3 UH	04213	CB6541-48
L2	0082981	INDUCTOR 16.2 UH PC MT RANGE +-10%	04213	CB6541-37
R1	0082075	RESISTOR 95.3 OHM RN60C 1% MTL FLM		RN60C95R3F
R2	0082064	RESISTOR 40.2 OHM RN60D 1% MTL FLM		RN60D40R2F
R3	0079895	RESISTOR 75.0 OHM RN60C 1% MTL FLM		RN60C75R0F
R4	0079895	RESISTOR 75.0 OHM RN60C 1% MTL FLM		RN60C75R0F
R5	0082993	RESISTOR 41.2 OHM RN60C 1% MTL FLM		RN60C41R2F
R6	0082048	RESISTOR 16.9 OHM RN60D 1% MTL FLM		RN60D16R9F
R7	0082080	RESISTOR 154 OHM RN60C 1% MTL FLM		RN60C1540F
R8	0082048	RESISTOR 16.9 OHM RN60D 1% MTL FLM		RN60D16R9F

PARTS LIST

ASSEMBLY E141445 PW BOARD ASSY 108 CHAN DE-EMPHASIS NTWK

ITEM	COMPONENT	DESCRIPTION	FSCM	MFR PART NUMBER
	0131668	SCHEM DIAG DE-EMPHASIS NETWORK		
	0131824	BOARD ASSEMBLY DE-EMPHASIS NETWORK		
1	0132347	PRINTED WIRING BOARD DE-EMPHASIS		
C1	0082970	CAPACITR .0024 MF 500V SILVER MICA 1%	53021	D205F242F03
C2	0080923	CAPACITR 130 PF 500V SILVER MICA 1%	53021	D155C131F03
C3	0078600	NOT ASSIGNED		
C4	0070559	CAPACITR .0051 MF 300V SILVER MICA 1%	14655	CD19FD512F03
C5	0078816	CAPACITR 330 PF 500V SILVER MICA 1%	53021	D155C331F03
C6	0082398	CAPACITR 43 PF 500V SILVER MICA 1%	53021	D155C430F03
E1	0081849	PIN FOR .040 SOCKET CONTACT	91833	1218 MODIFIED, SILVER
E2	0081849	PIN FOR .040 SOCKET CONTACT	91833	1218 MODIFIED, SILVER
E3	0081849	PIN FOR .040 SOCKET CONTACT	91833	1218 MODIFIED, SILVER
E4	0081849	PIN FOR .040 SOCKET CONTACT	91833	1218 MODIFIED, SILVER
E5	0081849	PIN FOR .040 SOCKET CONTACT	91833	1218 MODIFIED, SILVER
E6	0081849	PIN FOR .040 SOCKET CONTACT	91833	1218 MODIFIED, SILVER
L1	0082985	INDUCTOR 29.9 UH PC MT RANGE +-10%	04213	CB6541-26
L2	0082980	INDUCTOR 13.7 UH PC MT RANGE +-10%	04213	CB6541-22
R1	0082075	RESISTOR 95.3 OHM RN60C 1% MTL FLM		RN60C95R3F
R2	0082064	RESISTOR 40.2 OHM RN60D 1% MTL FLM		RN60D40R2F
R3	0079895	RESISTOR 75.0 OHM RN60C 1% MTL FLM		RN60C75R0F
R4	0079895	RESISTOR 75.0 OHM RN60C 1% MTL FLM		RN60C75R0F
R5	0082993	RESISTOR 41.2 OHM RN60C 1% MTL FLM		RN60C41R2F
R6	0082048	RESISTOR 16.9 OHM RN60D 1% MTL FLM		RN60D16R9F
R7	0082080	RESISTOR 154 OHM RN60C 1% MTL FLM		RN60C1540F
R8	0082048	RESISTOR 16.9 OHM RN60D 1% MTL FLM		RN60D16R9F

PARTS LIST

ASSEMBLY E141446 PW BOARD ASSY 120 CHAN DE-EMPHASIS NTWK

ITEM	COMPONENT	DESCRIPTION	FSCM	MFR PART NUMBER
	0131668	SCHEM DIAG DE-EMPHASIS NETWORK		
	0131824	BOARD ASSEMBLY DE-EMPHASIS NETWORK		
1	0132347	PRINTED WIRING BOARD DE-EMPHASIS		
C1	0078829	CAPACITR .00101 MF 500V SILVER MICA 1%	53021	D195CXXXF03 1010 PF
C2	0078828	CAPACITR .00101 MF 500V SILVER MICA 1%	53021	D195CXXXF03 1010 PF
C3	0078813	CAPACITR 270 PF 500V SILVER MICA 1%	53021	D155C271F03
C4	0082975	CAPACITR .00452 MF 500V MOLDED SIL M 1%		
C5	0080144	CAPACITR 430 PF 500V SILVER MICA 1%	53021	D155C431F03
C6	0078600	NOT ASSIGNED		
E1	0081849	PIN FOR .040 SOCKET CONTACT	91833	1218 MODIFIED, SILVER
E2	0081849	PIN FOR .040 SOCKET CONTACT	91833	1218 MODIFIED, SILVER
E3	0081849	PIN FOR .040 SOCKET CONTACT	91833	1218 MODIFIED, SILVER
E4	0081849	PIN FOR .040 SOCKET CONTACT	91833	1218 MODIFIED, SILVER
E5	0081849	PIN FOR .040 SOCKET CONTACT	91833	1218 MODIFIED, SILVER
E6	0081849	PIN FOR .040 SOCKET CONTACT	91833	1218 MODIFIED, SILVER
L1	0084446	INDUCTOR 26.2 UH PC MT RANGE +-2.5 UH	04213	CB6541-51
L2	0082979	INDUCTOR 12.5 UH PC MT RANGE +-10%	04213	CB6541-35
R1	0082075	RESISTOR 95.3 OHM RN60C 1% MTL FLM		RN60C95R3F
R2	0082064	RESISTOR 40.2 OHM RN60D 1% MTL FLM		RN60D40R2F
R3	0079895	RESISTOR 75.0 OHM RN60C 1% MTL FLM		RN60C75R0F
R4	0079895	RESISTOR 75.0 OHM RN60C 1% MTL FLM		RN60C75R0F
R5	0082993	RESISTOR 41.2 OHM RN60C 1% MTL FLM		RN60C41R2F
R6	0082048	RESISTOR 16.9 OHM RN60D 1% MTL FLM		RN60D16R9F
R7	0082080	RESISTOR 154 OHM RN60C 1% MTL FLM		RN60C1540F
R8	0082048	RESISTOR 16.9 OHM RN60D 1% MTL FLM		RN60D16R9F

PARTS LIST

ASSEMBLY E131710 PW BOARD ASSY 132 CHAN DE-EMPHASIS NTWK

ITEM	COMPONENT	DESCRIPTION	FSCM	MFR PART NUMBER
	0131668	SCHEM DIAG DE-EMPHASIS NETWORK		
	0131824	BOARD ASSEMBLY DE-EMPHASIS NETWORK		
1	0132347	PRINTED WIRING BOARD DE-EMPHASIS		
C1	0080767	CAPACITR .002 MF 500V SILVER MICA 1%	53021	D195C202F03
C2	0082965	CAPACITR 90 PF 500V SILVER MICA 1%		
C3	0078600	NOT ASSIGNED		
C4	0082975	CAPACITR .00452 MF 500V MOLDED SIL M 1%		
C5	0078600	NOT ASSIGNED		
C6	0078600	NOT ASSIGNED		
E1	0081849	PIN FOR .040 SOCKET CONTACT	91833	1218 MODIFIED, SILVER
E2	0081849	PIN FOR .040 SOCKET CONTACT	91833	1218 MODIFIED, SILVER
E3	0081849	PIN FOR .040 SOCKET CONTACT	91833	1218 MODIFIED, SILVER
E4	0081849	PIN FOR .040 SOCKET CONTACT	91833	1218 MODIFIED, SILVER
E5	0081849	PIN FOR .040 SOCKET CONTACT	91833	1218 MODIFIED, SILVER
E6	0081849	PIN FOR .040 SOCKET CONTACT	91833	1218 MODIFIED, SILVER
L1	0082983	INDUCTOR 25.4 UH PC MT RANGE +-10%	04213	CB6541-24
L2	0082978	INDUCTOR 11.8 UH PC MT RANGE +-10%	04213	CB6541-21
R1	0082075	RESISTOR 95.3 OHM RN60C 1% MTL FLM		RN60C95R3F
R2	0082064	RESISTOR 40.2 OHM RN60D 1% MTL FLM		RN60D40R2F
R3	0079895	RESISTOR 75.0 OHM RN60C 1% MTL FLM		RN60C75R0F
R4	0079895	RESISTOR 75.0 OHM RN60C 1% MTL FLM		RN60C75R0F
R5	0082993	RESISTOR 41.2 OHM RN60C 1% MTL FLM		RN60C41R2F
R6	0082048	RESISTOR 16.9 OHM RN60D 1% MTL FLM		RN60D16R9F
R7	0082080	RESISTOR 154 OHM RN60C 1% MTL FLM		RN60C1540F
R8	0082043	RESISTOR 16.9 OHM RN60D 1% MTL FLM		RN60D16R9F

ASSEMBLY E141447 Pw BOARD ASSY 144 CHAN DE-EMPHASIS NTWK

ITEM	COMPONENT	DESCRIPTION	FSCM	MFR PART NUMBER
	0131668	SCHEM DIAG DE-EMPHASIS NETWORK		
	0131824	BOARD ASSEMBLY DE-EMPHASIS NETWORK		
1	0132347	PRINTED WIRING BOARD DE-EMPHASIS		
C1	0078828	CAPACITR .0101 MF 500V SILVER MICA 1%	53021	D195CXXXF03 1010 PF
C2	0080145	CAPACITR 450 PF 500V SILVER MICA 1%	53021	D155C451F03
C3	0080144	CAPACITR 430 PF 500V SILVER MICA 1%	53021	D155C431F03
C4	0082971	CAPACITR .0031 MF 500V SILVER MICA 1%		
C5	0082402	CAPACITR 680 PF 500V SILVER MICA 1%	53021	D155C681F03
C6	0078815	CAPACITR 300 PF 500V SILVER MICA 1%	53021	D155C301F03
E1	0081849	PIN FOR .040 SOCKET CONTACT	91833	1218 MODIFIED, SILVER
E2	0081849	PIN FOR .040 SOCKET CONTACT	91833	1218 MODIFIED, SILVER
E3	0081849	PIN FOR .040 SOCKET CONTACT	91833	1218 MODIFIED, SILVER
E4	0081849	PIN FOR .040 SOCKET CONTACT	91833	1218 MODIFIED, SILVER
E5	0081849	PIN FOR .040 SOCKET CONTACT	91833	1218 MODIFIED, SILVER
E6	0081849	PIN FOR .040 SOCKET CONTACT	91833	1218 MODIFIED, SILVER
L1	0082982	INDUCTOR 21.9 UH PC MT RANGE +-10%	04213	CB6541-23
L2	0083731	INDUCTOR 10.1 UH PC MT RANGE +-1.1UH MIN	04213	CB6541-39
R1	0082075	RESISTOR 95.3 OHM RN60C 1% MTL FLM		RN60C95R3F
R2	0082064	RESISTOR 40.2 OHM RN60D 1% MTL FLM		RN60D40R2F
R3	0079895	RESISTOR 75.0 OHM RN60C 1% MTL FLM		RN60C75R0F
R4	0079895	RESISTOR 75.0 OHM RN60C 1% MTL FLM		RN60C75R0F
R5	0082993	RESISTOR 41.2 OHM RN60C 1% MTL FLM		RN60C41R2F
R6	0082048	RESISTOR 16.9 OHM RN60D 1% MTL FLM		RN60D16R9F
R7	0082080	RESISTOR 154 OHM RN60C 1% MTL FLM		RN60C1540F
R8	0082048	RESISTOR 16.9 OHM RN60D 1% MTL FLM		RN60D16R9F

PARTS LIST

ASSEMBLY E141448 PW BOARD ASSY 180 CHAN DE-EMPHASIS NTWK

ITEM	COMPONENT	DESCRIPTION	FSCM	MFR PART NUMBER
	0131668	SCHEM DIAG DE-EMPHASIS NETWORK		
	0131824	BOARD ASSEMBLY DE-EMPHASIS NETWORK		
1	0132347	PRINTED WIRING BOARD DE-EMPHASIS		
C1	0078823	CAPACITR .00101 MF 500V SILVER MICA 1%	53021	D195CXXXF03 1010 PF
C2	0082401	CAPACITR 400 PF 500V SILVER MICA 1%	53021	D155C401F03
C3	0080922	CAPACITR 120 PF 500V SILVER MICA 1%	53021	D155C121F03
C4	0082971	CAPACITR .0031 MF 500V SILVER MICA 1%		
C5	0078806	CAPACITR 200 PF 500V SILVER MICA 1%	53021	D155C201F03
C6	0078600	NOT ASSIGNED		
E1	0081849	PIN FOR .040 SOCKET CONTACT	91833	1218 MODIFIED, SILVER
E2	0081849	PIN FOR .040 SOCKET CONTACT	91833	1218 MODIFIED, SILVER
E3	0081849	PIN FOR .040 SOCKET CONTACT	91833	1218 MODIFIED, SILVER
E4	0081849	PIN FOR .040 SOCKET CONTACT	91833	1218 MODIFIED, SILVER
E5	0081849	PIN FOR .040 SOCKET CONTACT	91833	1218 MODIFIED, SILVER
E6	0081849	PIN FOR .040 SOCKET CONTACT	91833	1218 MODIFIED, SILVER
L1	0084444	INDUCTOR 18.0 UH PC MT RANGE +-1.5 UH	04213	CB6541-49
L2	0082977	INDUCTOR 8.7 UH PC MT RANGE +-10%	04213	CB6541-36
R1	0082075	RESISTOR 95.3 OHM RN60C 1% MTL FLM		RN60C95R3F
R2	0082064	RESISTOR 40.2 OHM RN60D 1% MTL FLM		RN60D40R2F
R3	0079895	RESISTOR 75.0 OHM RN60C 1% MTL FLM		RN60C75R0F
R4	0079895	RESISTOR 75.0 OHM RN60C 1% MTL FLM		RN60C75R0F
R5	0082993	RESISTOR 41.2 OHM RN60C 1% MTL FLM		RN60C41R2F
R6	0082048	RESISTOR 16.9 OHM RN60D 1% MTL FLM		RN60D16R9F
R7	0082080	RESISTOR 154 OHM RN60C 1% MTL FLM		RN60C1540F
R8	0082048	RESISTOR 16.9 OHM RN60D 1% MTL FLM		RN60D16R9F

PARTS LIST

ASSEMBLY E131711 PW BOARD ASSY 192 CHAN DE-EMPHASIS NTWK

ITEM	COMPONENT	DESCRIPTION	FSCM	MFR PART NUMBER
	0131668	SCHEM DIAG DE-EMPHASIS NETWORK		
	0131824	BOARD ASSEMBLY DE-EMPHASIS NETWORK		
1	0132347	PRINTED WIRING BOARD DE-EMPHASIS		
C1	0082969	CAPACITR .001 MF 500V SILVER MICA 1%	53021	D195F102F03
C2	0080144	CAPACITR 430 PF 500V SILVER MICA 1%	53021	D155C431F03
C3	0073490	CAPACITR 5 PF 500V SILVER MICA +-.5PF	14655	CD15CD050D03
C4	0082971	CAPACITR .0031 MF 500V SILVER MICA 1%		
C5	0078600	NOT ASSIGNED		
C6	0078600	NOT ASSIGNED		
E1	0081849	PIN FOR .040 SOCKET CONTACT	91833	1218 MODIFIED, SILVER
E2	0081849	PIN FOR .040 SOCKET CONTACT	91833	1218 MODIFIED, SILVER
E3	0081849	PIN FOR .040 SOCKET CONTACT	91833	1218 MODIFIED, SILVER
E4	0081849	PIN FOR .040 SOCKET CONTACT	91833	1218 MODIFIED, SILVER
E5	0081849	PIN FOR .040 SOCKET CONTACT	91833	1218 MODIFIED, SILVER
E6	0081849	PIN FOR .040 SOCKET CONTACT	91833	1218 MODIFIED, SILVER
L1	0082981	INDUCTOR 16.2 UH PC MT RANGE +-10%	04213	CB6541-37
L2	0082977	INDUCTOR 8.7 UH PC MT RANGE +-10%	04213	CB6541-36
R1	0082075	RESISTOR 95.3 OHM RN60C 1% MTL FLM		RN60C95R3F
R2	0082064	RESISTOR 40.2 OHM RN60D 1% MTL FLM		RN60D40R2F
R3	0079895	RESISTOR 75.0 OHM RN60C 1% MTL FLM		RN60C75R0F
R4	0079895	RESISTOR 75.0 OHM RN60C 1% MTL FLM		RN60C75R0F
R5	0082993	RESISTOR 41.2 OHM RN60C 1% MTL FLM		RN60C41R2F
R6	0082048	RESISTOR 16.9 OHM RN60D 1% MTL FLM		RN60D16R9F
R7	0082080	RESISTOR 154 OHM RN60C 1% MTL FLM		RN60C154F
R8	0082048	RESISTOR 16.9 OHM RN60D 1% MTL FLM		RN60D16R9F

PARTS LIST

ASSEMBLY E131712 PW BOARD ASSY 252 CHAN DE-EMPHASIS NTWK

ITEM	COMPONENT	DESCRIPTION	FSCM	MFR PART NUMBER
	0131668	SCHEM DIAG DE-EMPHASIS NETWORK		
	0131824	BOARD ASSEMBLY DE-EMPHASIS NETWORK		
1	0132347	PRINTED WIRING BOARD DE-EMPHASIS		
C1	0082969	CAPACITR .001 MF 500V SILVER MICA 1%	53021	D195F102F03
C2	0082965	CAPACITR 90 PF 500V SILVER MICA 1%		
C3	0073489	CAPACITR 8 PF 500V CER TUBULAR	00656	CC20CH080C
C4	0080767	CAPACITR .002 MF 500V SILVER MICA 1%	53021	D195C202F03
C5	0082966	CAPACITR 370 PF 500V SILVER MICA 1%		
C6	0079600	NOT ASSIGNED		
E1	0081849	PIN FOR .040 SOCKET CONTACT	91833	1218 MODIFIED, SILVER
E2	0081849	PIN FOR .040 SOCKET CONTACT	91833	1218 MODIFIED, SILVER
E3	0081849	PIN FOR .040 SOCKET CONTACT	91833	1218 MODIFIED, SILVER
E4	0081849	PIN FOR .040 SOCKET CONTACT	91833	1218 MODIFIED, SILVER
E5	0081849	PIN FOR .040 SOCKET CONTACT	91833	1218 MODIFIED, SILVER
E6	0081849	PIN FOR .040 SOCKET CONTACT	91833	1218 MODIFIED, SILVER
L1	0082980	INDUCTOR 13.7 UH PC MT RANGE +-10%	04213	CB6541-22
L2	0082976	INDUCTOR 6.7 UH PC MT RANGE +-10%	04213	CB6541-34
R1	0082075	RESISTOR 95.3 OHM RN60C 1% MTL FLM		RN60C95R3F
R2	0082064	RESISTOR 40.2 OHM RN60D 1% MTL FLM		RN60D40R2F
R3	0079895	RESISTOR 75.0 OHM RN60C 1% MTL FLM		RN60C75R0F
R4	0079895	RESISTOR 75.0 OHM RN60C 1% MTL FLM		RN60C75R0F
R5	0082903	RESISTOR 41.2 OHM RN60C 1% MTL FLM		RN60C41R2F
R6	0082048	RESISTOR 16.9 OHM RN60D 1% MTL FLM		RN60D16R9F
R7	0082080	RESISTOR 154 OHM RN60C 1% MTL FLM		RN60C1540F
R8	0082048	RESISTOR 16.9 OHM RN60D 1% MTL FLM		RN60D16R9F

PARTS LIST

ASSEMBLY E131713 PW BOARD ASSY 312 CHAN DE-EMPHASIS NTWK

ITEM	COMPONENT	DESCRIPTION	FSCM	MFR PART NUMBER
	0131668	SCHEM DIAG DE-EMPHASIS NETWORK		
	0131824	BOARD ASSEMBLY DE-EMPHASIS NETWORK		
1	0132347	PRINTED WIRING BOARD DE-EMPHASIS		
C1	0082968	CAPACITR 750 PF 300V SILVER MICA 1%	14655	CD6FC101G03
C2	0077963	CAPACITR 100 PF 300V SILVER MICA 2%	53021	D195F102F03
C3	0073600	NOT ASSIGNED		
C4	0082969	CAPACITR .001 MF 500V SILVER MICA 1%	53021	D155C201F03
C5	0082968	CAPACITR 750 PF 300V SILVER MICA 1%	91833	1218 MODIFIED, SILVER
C6	0078806	CAPACITR 200 PF 500V SILVER MICA 1%	91833	1218 MODIFIED, SILVER
E1	0081849	PIN FOR .040 SOCKET CONTACT	91833	1218 MODIFIED, SILVER
E2	0081849	PIN FOR .040 SOCKET CONTACT	91833	1218 MODIFIED, SILVER
E3	0081849	PIN FOR .040 SOCKET CONTACT	91833	1218 MODIFIED, SILVER
E4	0081849	PIN FOR .040 SOCKET CONTACT	91833	1218 MODIFIED, SILVER
E5	0081849	PIN FOR .040 SOCKET CONTACT	91833	1218 MODIFIED, SILVER
E6	0081849	PIN FOR .040 SOCKET CONTACT	04213	CB6541-39
L1	0083731	INDUCTOR 10.1 UH PC MT RANGE +-1.1UH MIN	04213	CB6541-38
L2	0083729	INDUCTOR 5.4 UH PC MT RANGE +-.6 UH MIN.		RN60C95R3F
R1	0082075	RESISTOR 95.3 OHM RN60C 1% MTL FLM		RN60D40R2F
R2	0082064	RESISTOR 40.2 OHM RN60D 1% MTL FLM		RN60C75R0F
R3	0079895	RESISTOR 75.0 OHM RN60C 1% MTL FLM		RN60C75R0F
R4	0079895	RESISTOR 75.0 OHM RN60C 1% MTL FLM		RN60C41R2F
R5	0082993	RESISTOR 41.2 OHM RN60C 1% MTL FLM		RN60D16R9F
R6	0082048	RESISTOR 16.9 OHM RN60D 1% MTL FLM		RN60C154OF
R7	0082080	RESISTOR 154 OHM RN60C 1% MTL FLM		RN60D16R9F
R8	0082048	RESISTOR 16.9 OHM RN60D 1% MTL FLM		

PARTS LIST

ASSEMBLY E141449 PW BOARD ASSY 360 CHAN DE-EMPHASIS NTWK

ITEM	COMPONENT	DESCRIPTION	FSCM	MFR PART NUMBER
	0131668	SCHEM DIAG DE-EMPHASIS NETWORK		
	0131824	BOARD ASSEMBLY DE-EMPHASIS NETWORK		
1	0132347	PRINTED WIRING BOARD DE-EMPHASIS		
C1	0080143	CAPACITR 256 PF 500V SILVER MICA 1%	53021	D105CXXXF03 256 PF
C2	0080143	CAPACITR 256 PF 500V SILVER MICA 1%	53021	D105CXXXF03 256 PF
C3	0080143	CAPACITR 256 PF 500V SILVER MICA 1%	53021	D105CXXXF03 256 PF
C4	0082969	CAPACITR .001 MF 500V SILVER MICA 1%	53021	D195F102F03
C5	0078816	CAPACITR 330 PF 500V SILVER MICA 1%	53021	D155C331F03
C6	0078816	CAPACITR 330 PF 500V SILVER MICA 1%	53021	D155C331F03
E1	0081849	PIN FOR .040 SOCKET CONTACT	91833	1218 MODIFIED, SILVER
E2	0081849	PIN FOR .040 SOCKET CONTACT	91833	1218 MODIFIED, SILVER
E3	0081849	PIN FOR .040 SOCKET CONTACT	91833	1218 MODIFIED, SILVER
E4	0081849	PIN FOR .040 SOCKET CONTACT	91833	1218 MODIFIED, SILVER
E5	0081849	PIN FOR .040 SOCKET CONTACT	91833	1218 MODIFIED, SILVER
E6	0081849	PIN FOR .040 SOCKET CONTACT	91833	1218 MODIFIED, SILVER
L1	0082977	INDUCTOR 8.7 UH PC MT RANGE +-10%	04213	CR6541-36
L2	0083728	INDUCTOR 3.9 UH PC MT RANGE +-.5 UH MIN.	04213	CR6541-40
R1	0082075	RESISTOR 95.3 OHM RN60C 1% MTL FLM		RN60C95R3F
R2	0082064	RESISTOR 40.2 OHM RN60D 1% MTL FLM		RN60D40R2F
R3	0079895	RESISTOR 75.0 OHM RN60C 1% MTL FLM		RN60C75R0F
R4	0079895	RESISTOR 75.0 OHM RN60C 1% MTL FLM		RN60C75R0F
R5	0082993	RESISTOR 41.2 OHM RN60C 1% MTL FLM		RN60C41R2F
R6	0082048	RESISTOR 16.9 OHM RN60D 1% MTL FLM		RN60D16R9F
R7	0082080	RESISTOR 154 OHM RN60C 1% MTL FLM		RN60C154OF
R8	0082048	RESISTOR 16.9 OHM RN60D 1% MTL FLM		RN60D16R9F

PARTS LIST

ASSEMBLY E131714 PW BOARD ASSY 432 CHAN DE-EMPHASIS NTWK

ITEM	COMPONENT	DESCRIPTION	FSCM	MFR PART NUMBER
	0131668	SCHEM DIAG DE-EMPHASIS NETWORK		
	0131824	BOARD ASSEMBLY DE-EMPHASIS NETWORK		
1	0132347	PRINTED WIRING BOARD DE-EMPHASIS		
C1	0080144	CAPACITR 430 PF 500V SILVER MICA 1%	53021	D155C431F03
C2	0078805	CAPACITR 180 PF 500V SILVER MICA 1%	53021	D155C181F03
C3	0081821	CAPACITR 33 PF 100V SILVER MICA 2%	53021	D151C330G03
C4	0082969	CAPACITR .001 MF 500V SILVER MICA 1%	53021	D195F102F03
C5	0082956	CAPACITR 370 PF 500V SILVER MICA 1%		
C6	0080142	CAPACITR 20 PF 500V SILVER MICA 5%	14655	CD15ED200J03
E1	0081849	PIN FOR .040 SOCKET CONTACT	91833	1218 MODIFIED, SILVER
E2	0081849	PIN FOR .040 SOCKET CONTACT	91833	1218 MODIFIED, SILVER
E3	0081849	PIN FOR .040 SOCKET CONTACT	91833	1218 MODIFIED, SILVER
E4	0081849	PIN FOR .040 SOCKET CONTACT	91833	1218 MODIFIED, SILVER
E5	0081849	PIN FOR .040 SOCKET CONTACT	91833	1218 MODIFIED, SILVER
E6	0081849	PIN FOR .040 SOCKET CONTACT	91833	1218 MODIFIED, SILVER
L1	0082977	INDUCTOR 8.7 UH PC MT RANGE +-10%	04213	CB6541-36
L2	0083728	INDUCTOR 3.9 UH PC MT RANGE +-.5 UH MIN.	04213	CB6541-40
R1	0082075	RESISTOR 95.3 OHM RN60C 1% MTL FLM		RN60C95R3F
R2	0082064	RESISTOR 40.2 OHM RN60D 1% MTL FLM		RN60D40R2F
R3	0079895	RESISTOR 75.0 OHM RN60C 1% MTL FLM		RN60C75R0F
R4	0079895	RESISTOR 75.0 OHM RN60C 1% MTL FLM		RN60C75R0F
R5	0082993	RESISTOR 41.2 OHM RN60C 1% MTL FLM		RN60C41R2F
R6	0082048	RESISTOR 16.9 OHM RN60D 1% MTL FLM		RN60D16R9F
R7	0082080	RESISTOR 154 OHM RN60C 1% MTL FLM		RN60C1540F
R8	0082048	RESISTOR 16.9 OHM RN60D 1% MTL FLM		RN60D16R9F

PARTS LIST

ASSEMBLY E131715 PW BOARD ASSY C12 CHAN DE-EMPHASIS NTWK

ITEM	COMPONENT	DESCRIPTION	FSCM	MFR PART NUMBER
	C131668	SCHEM DIAG DE-EMPHASIS NETWORK		
	0131824	BOARD ASSEMBLY DE-EMPHASIS NETWORK		
1	0132347	PRINTED WIRING BOARD DE-EMPHASIS		
C1	0080145	CAPACITR 450 PF 500V SILVER MICA 1%	53021	D155C451F03
C2	0073490	CAPACITR 5 PF 500V SILVER MICA +-.5PF	14655	CD15CD050C03
C3	0078600	NOT ASSIGNED		
C4	0080146	CAPACITR 675 PF 500V SILVER MICA 1%	53021	D155CXXXF03 675 PF
C5	0078813	CAPACITR 270 PF 500V SILVER MICA 1%	53021	D155C271F03
C6	0081831	CAPACITR 38 PF 500V SILVER MICA 2%	53021	D155C380G03
E1	0081849	PIN FOR .040 SOCKET CONTACT	91833	1218 MODIFIED, SILVER
E2	0081849	PIN FOR .040 SOCKET CONTACT	91833	1218 MODIFIED, SILVER
E3	0081849	PIN FOR .040 SOCKET CONTACT	91833	1218 MODIFIED, SILVER
E4	0081849	PIN FOR .040 SOCKET CONTACT	91833	1218 MODIFIED, SILVER
E5	0081849	PIN FOR .040 SOCKET CONTACT	91833	1218 MODIFIED, SILVER
E6	0081849	PIN FOR .040 SOCKET CONTACT	91833	1218 MODIFIED, SILVER
L1	0083729	INDUCTOR 5.4 UH PC MT RANGE +-.6 UH MIN.	04213	CB6541-38
L2	0083726	INDUCTOR 2.75 UH PC MT RANGE +-.35UH MIN	04213	CB6541-42
R1	0082075	RESISTOR 95.3 OHM RN60C 1% MTL FLM		RN60C95R3F
R2	0082064	RESISTOR 40.2 OHM RN60D 1% MTL FLM		RN60D40R2F
R3	0079895	RESISTOR 75.0 OHM RN60C 1% MTL FLM		RN60C75R0F
R4	0079895	RESISTOR 75.0 OHM RN60C 1% MTL FLM		RN60C75R0F
R5	0082993	RESISTOR 41.2 OHM RN60C 1% MTL FLM		RN60C41R2F
R6	0082048	RESISTOR 16.9 OHM RN60D 1% MTL FLM		RN60D16R9F
R7	0082080	RESISTOR 154 OHM RN60C 1% MTL FLM		RN60C154OF
R8	0082048	RESISTOR 16.9 OHM RN60D 1% MTL FLM		RN60D16R9F

PARTS LIST

ASSEMBLY E131716 PW BOARD ASSY 792 CHAN DE-EMPHASIS NTWK

ITEM	COMPONENT	DESCRIPTION	FSCM	MFR PART NUMBER
	0131668	SCHEM DIAG DE-EMPHASIS NETWORK		
	0131824	BOARD ASSEMBLY DE-EMPHASIS NETWORK		
1	0132347	PRINTED WIRING BOARD DE-EMPHASIS		
C1	0078805	CAPACITR 180 PF 500V SILVER MICA 1%	53021	D155C181F03
C2	0078803	CAPACITR 150 PF 500V SILVER MICA 1%	53021	D155C151F03
C3	0082397	CAPACITR 30 PF 500V SILVER MICA 1%	53021	D155C300F03
C4	0082967	CAPACITR 700 PF 300V SILVER MICA 1%		
C5	0080922	CAPACITR 120 PF 500V SILVER MICA 1%	53021	D155C121F03
C6	0078326	CAPACITR 24 PF 500V SILVER MICA 5%	14655	CD6ED240J03
E1	0081849	PIN FOR .040 SOCKET CONTACT	91833	1218 MODIFIED, SILVER
E2	0081849	PIN FOR .040 SOCKET CONTACT	91833	1218 MODIFIED, SILVER
E3	0081849	PIN FOR .040 SOCKET CONTACT	91833	1218 MODIFIED, SILVER
E4	0081849	PIN FOR .040 SOCKET CONTACT	91833	1218 MODIFIED, SILVER
E5	0081849	PIN FOR .040 SOCKET CONTACT	91833	1218 MODIFIED, SILVER
E6	0081849	PIN FOR .040 SOCKET CONTACT	91833	1218 MODIFIED, SILVER
L1	0083728	INDUCTOR 3.9 UH PC MT RANGE +-.5 UH MIN.	04213	CB6541-40
L2	0083729	INDUCTOR 2.1 UH PC MT RANGE +-.3 UH MIN.	04213	CB6541-43
R1	0082075	RESISTOR 95.3 OHM RN60C 1% MTL FLM		RN60C95R3F
R2	0082064	RESISTOR 40.2 OHM RN60D 1% MTL FLM		RN60D40R2F
R3	0079875	RESISTOR 75.0 OHM RN60C 1% MTL FLM		RN60C75R0F
R4	0079875	RESISTOR 75.0 OHM RN60C 1% MTL FLM		RN60C75R0F
R5	0082593	RESISTOR 41.2 OHM RN60C 1% MTL FLM		RN60C41R2F
R6	0082048	RESISTOR 16.9 OHM RN60D 1% MTL FLM		RN60D16R9F
R7	0082060	RESISTOR 154 OHM RN60C 1% MTL FLM		RN60C1540F
R8	0082048	RESISTOR 16.9 OHM RN60D 1% MTL FLM		RN60D16R9F

PARTS LIST

ASSEMBLY E131717 PW BOARD ASSY 972 CHAN DE-EMPHASIS NTWK

ITEM	COMPONENT	DESCRIPTION	FSCM	MFR PART NUMBER
	0131668	SCHEM DIAG DE-EMPHASIS NETWORK		
	0131824	BOARD ASSEMBLY DE-EMPHASIS NETWORK		
1	0132347	PRINTED WIRING BOARD DE-EMPHASIS		
C1	0078806	CAPACITR 200 PF 500V SILVER MICA 1%	53021	D155C201F03
C2	0081825	CAPACITR 87 PF 100V SILVER MICA 2%	53021	D151C870G03
C3	0078600	NOT ASSIGNED		
C4	0078819	CAPACITR 470 PF 500V SILVER MICA 1%	53021	D155C471F03
C5	0080923	CAPACITR 130 PF 500V SILVER MICA 1%	53021	D155C131F03
C6	0082399	CAPACITR 75 PF 500V SILVER MICA 1%	53021	D155C750F03
E1	0081849	PIN FOR .040 SOCKET CONTACT	91833	1218 MODIFIED, SILVER
E2	0081849	PIN FOR .040 SOCKET CONTACT	91833	1218 MODIFIED, SILVER
E3	0081849	PIN FOR .040 SOCKET CONTACT	91833	1218 MODIFIED, SILVER
E4	0081849	PIN FOR .040 SOCKET CONTACT	91833	1218 MODIFIED, SILVER
E5	0081849	PIN FOR .040 SOCKET CONTACT	91833	1218 MODIFIED, SILVER
E6	0081849	PIN FOR .040 SOCKET CONTACT	91833	1218 MODIFIED, SILVER
L1	0083727	INDUCTOR 3.25 UH PC MT RANGE +-.4 UH MIN	04213	CB6541-45
L2	0083724	INDUCTOR 1.7 UH PC MT RANGE +-.25 UH MIN	04213	CB6541-44
R1	0082075	RESISTOR 95.3 OHM RN60C 1% MTL FLM		RN60C95R3F
R2	0082064	RESISTOR 40.2 OHM RN60D 1% MTL FLM		RN60D40R2F
R3	0079895	RESISTOR 75.0 OHM RN60C 1% MTL FLM		RN60C75R0F
R4	0079895	RESISTOR 75.0 OHM RN60C 1% MTL FLM		RN60C75R0F
R5	0082993	RESISTOR 41.2 OHM RN60C 1% MTL FLM		RN60C41R2F
R6	0082048	RESISTOR 16.9 OHM RN60D 1% MTL FLM		RN60D16R9F
R7	0082080	RESISTOR 154 OHM RN60C 1% MTL FLM		RN60C154F
R8	0082048	RESISTOR 16.9 OHM RN60D 1% MTL FLM		RN60D16R9F

MANUFACTURER CODES

FSCM	MANUFACTURER
00656	Aerovox Corporation New Bedford, Massachusetts
00779	AMP Inc. Harrisburg, Pennsylvania
01121	Allen-Bradley Co. Milwaukee, Wisconsin
	RCL Electronics Inc. Manchester, New Hampshire
02113	Coilcraft Cary, Illinois
04213	Caddell Burns Mfg. Co. Inc. Mineola, New York
04713	Motorola Semiconductor Pdts. Phoenix, Arizona
05397	Kemet Div. - Union Carbide Cleveland, Ohio
06776	Robinson Nugent New Albany, Indiana
07145	Times Wire & Cable Co. Wallingford, Connecticut
09922	Burndy Corp. Norwalk, Connecticut
10110	Scientific-Atlanta Inc. Atlanta, Georgia
13715	Fairchild Semiconductor Corp. San Rafael, California
14655	Cornell - Dubilier Elec. Corp. S. Plainfield, New Jersey
53021	Sangamo Electric Corp. Springfield, Illinois
71279	Cambridge Thermionics Corp. Cambridge, Massachusetts

FSCM	MANUFACTURER
72962	Elastic Stop Nut Corp. of America Union, New Jersey
72982	Erie Resistor Corp. Erie, Pennsylvania
80294	Bourns Laboratories Inc. Riverside, California
80368	Sylvania Electric Pdts. Inc. New York, New York
84171	Arco Electronics Inc. New York, New York
91637	Dale Pdts. Inc. Columbus, Nebraska
91833	Keystone Electronics Corp. New York, New York

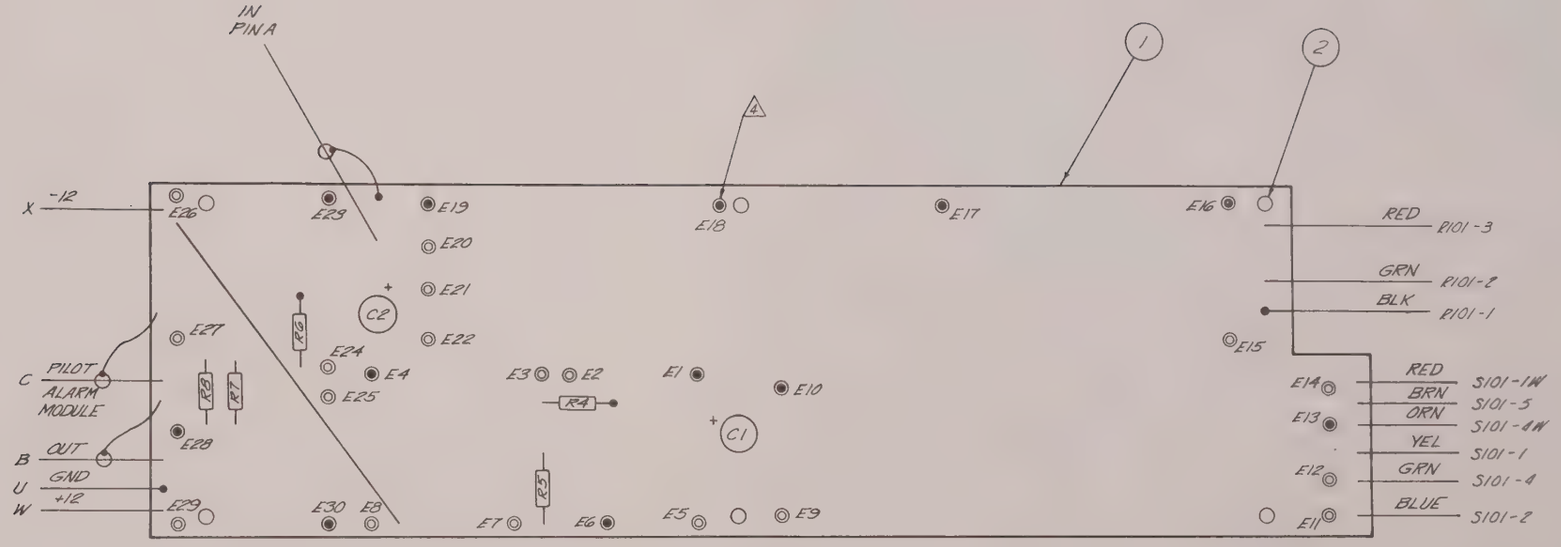

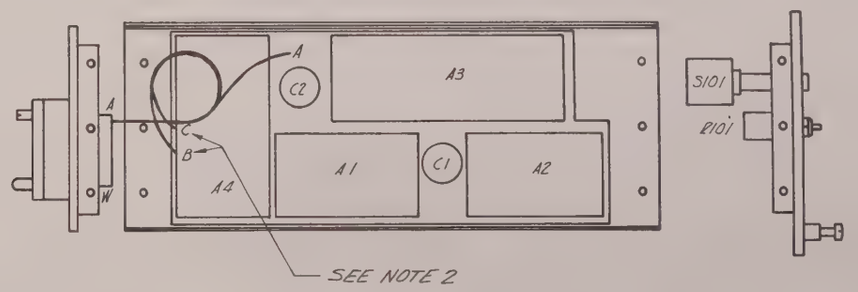

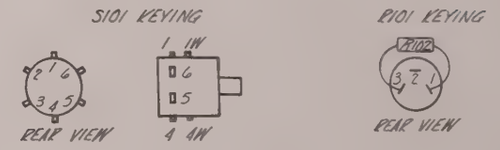

NOTE:

1. CIRCLED NUMBERS REFER TO SEPARATE PARTS LIST
2. THE SHIELDS OF THE CABLES FROM PIN B & C MUST BE SOLDERED FLAT ON THE GROUND PLANE AND PARALLEL TO THE EDGE OF THE BOARD.

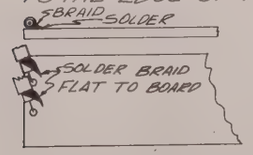

3. ALLOW ENOUGH LENGTH IN THE CABLE HARNESS SO THAT A1-A4 CAN BE EASILY INSTALLED.
4. INSTALL E1 THROUGH E30 WITH TOOL NO. 144021

Figure 22-3. Baseband Amplifier RX Assembly and Printed Wiring Board Assembly

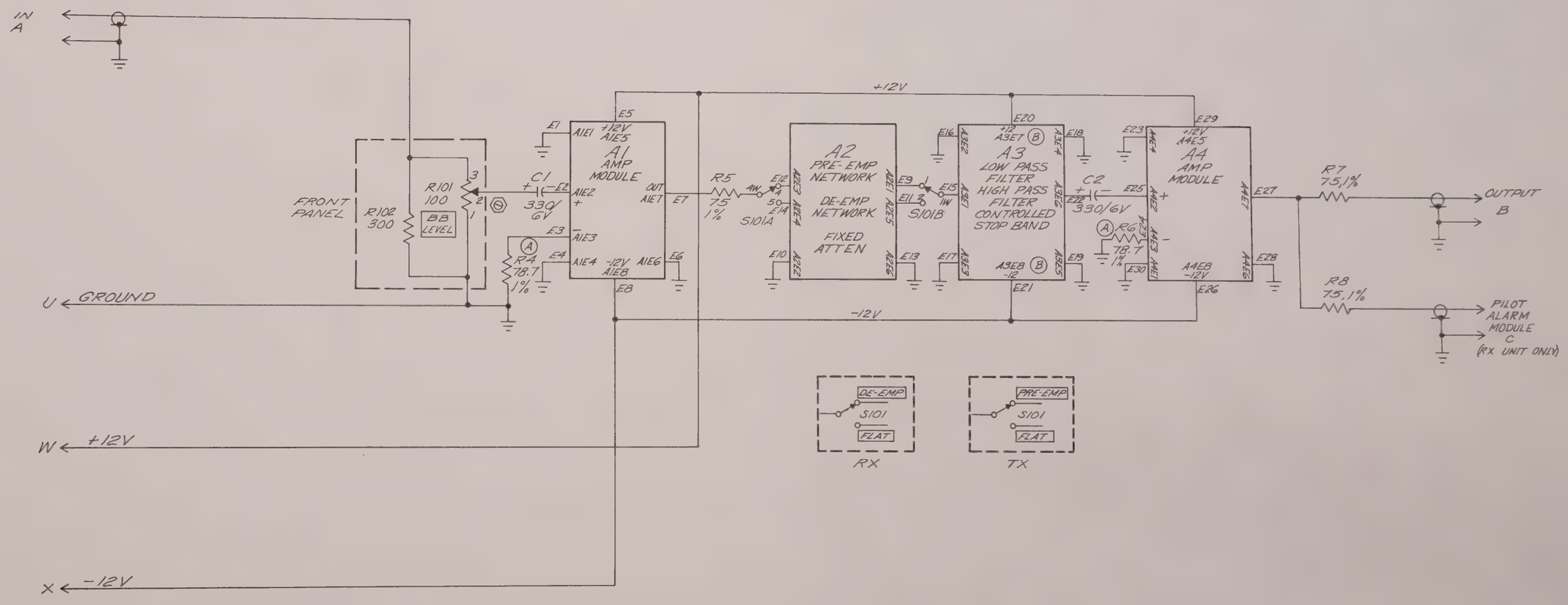

NOTES:

(A) 200Ω 5% USED IN RX UNITS

(B) THE LOW PASS FILTER DOES NOT HAVE TERMINALS A3E7 & A3E8

Figure 22-4. Model 411 and 461 Baseband Amplifier Schematic

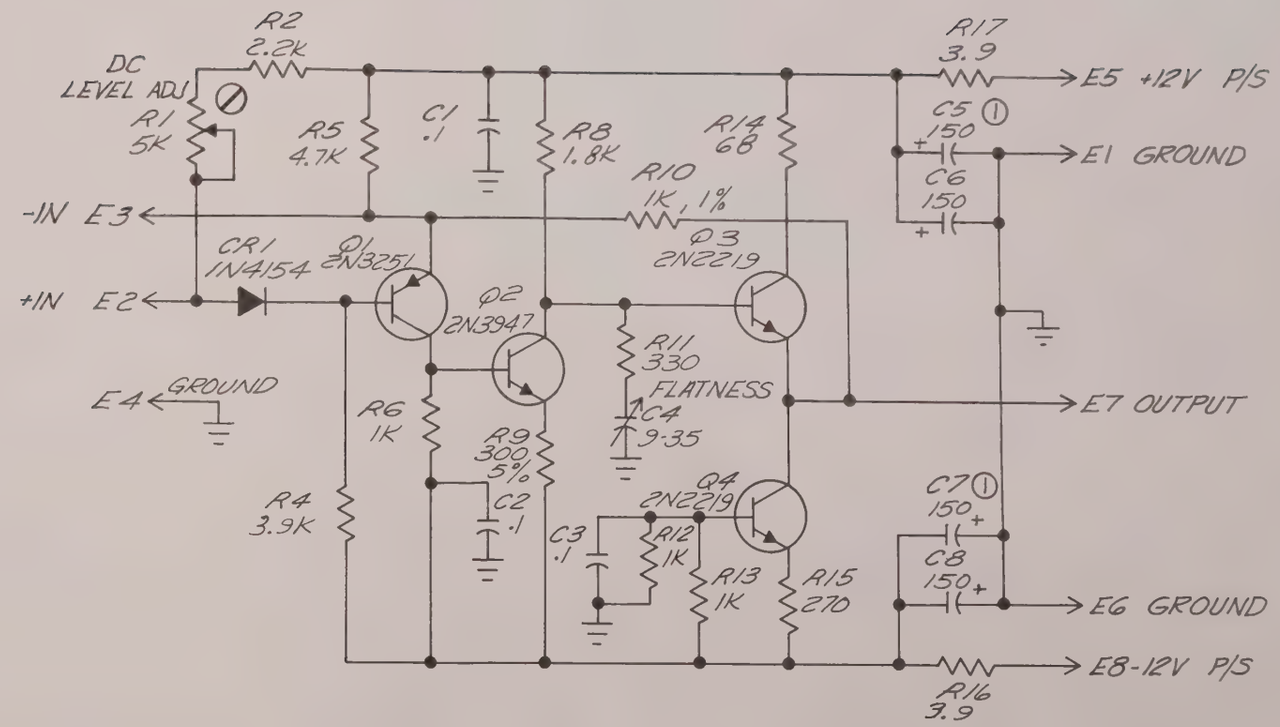

NOTES:

① C5 & C7 NOT USED FOR MESSAGE UNITS
② R3 & R7 NOT ASSIGNED

Figure 22-5. Video Plug-In Amplifier Schematic

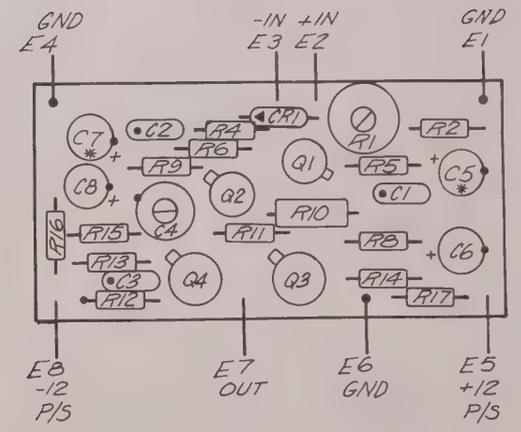

* C5,C7 NOT USED FOR MESSAGE UNITS

NOTES: 1. INSTALL TERMINALS E1-E8 FROM CIRCUIT SIDE OF BOARD WITH SHORT SIDE PASSING THROUGH BOARD.

Figure 22-6. Video Plug-In Amplifier Printed Wiring Board Assembly

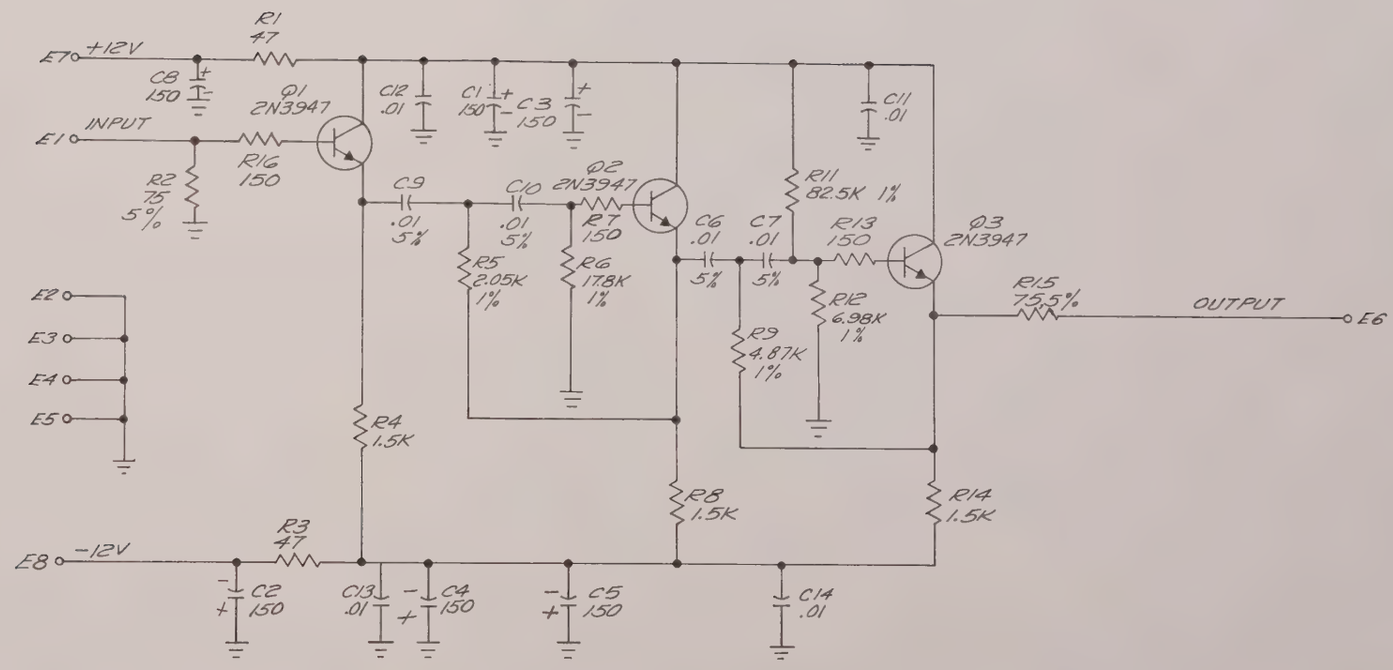

NOTE: 1. R10 NOT ASSIGNED

Figure 22-7. Highpass Baseband Filter Schematic

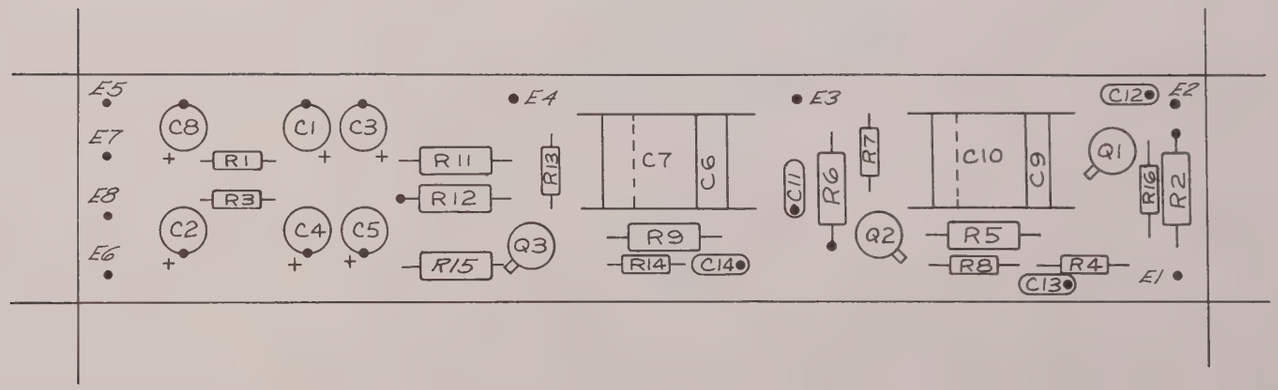

NOTES:

1. INSTALL TERMINALS E1-E8 FROM CIRCUIT SIDE OF BOARD WITH SHORT END PASSING THROUGH BOARD.
2. CAPACITORS C6, C7 AND C9, C10 ARE FOLDED OVER EACH OTHER SO AS TO LAY FLAT ON BOARD.

Figure 22-8. Highpass Filter Printed Wiring Board Assembly

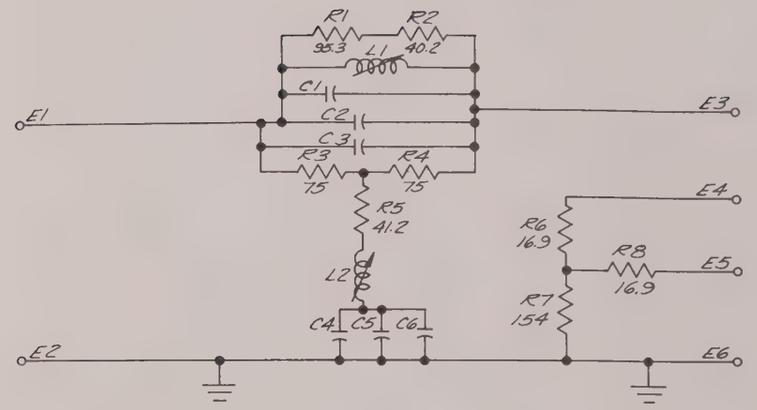

CHANNEL NO.	C1 (pf)	C2 (pf)	C3 (pf)	C4 (pf)	C5 (pf)	C6 (pf)	L1 (μh)	L2 (μh)
12	10,000	9,100	150	33,000	8,200	400	217	112
24	10,000	700	—	10,000	10,000	3,100	130	60.0
36	9,520	2,400	470	8,200	5,420	2,400	83	40.3
48	2,595	2,595	470	10,000	2,000	230	70.0	29.9
60	9,520	62.5%	—	9,900	—	—	55.7	25.8
72	3,100	700	47.5%	8,200	120	—	48.0	21.9
84	3,100	110	—	6200	680	51.2%	40.3	18
96	2,000	430	100	5,100	1,010	5±0.5	35	16.2
108	2,400	130	—	5,100	330	43	29.9	13.7
120	1,010	1,010	270	4,520	430	—	26.2	12.5
132	2,000	90	—	4,520	—	—	25.4	11.8
144	1,010	450	430	3,100	680	300	21.9	10.1
180	1,010	400	120	3,100	200	—	18.0	8.7
192	1,000	430	5±0.5	3,100	—	—	16.2	8.7
252	1,000	90	8, 5%	2,000	370	—	13.7	6.7
312	790	100.2%	—	1,000	790	200	10.1	5.4
360	256	256	256	1,000	330	330	8.7	3.9
432	430	180	33.2%	1,000	370	20.5%	8.7	3.9
612	450	5,±.5	—	675	270	38.2%	5.4	2.75
792	180	150	30	700	120	24.5%	3.9	2.1
972	200	87.2%	—	470	130	75	3.25	1.7

NOTES:
1. ALL VALUES ARE ±1% UNLESS OTHERWISE SPECIFIED.
2. INDUCTORS ARE VARIABLE UNLESS OTHERWISE SPECIFIED.

Figure 22-9. 24-972 Channel De-Emphasis Network Schematic

CHANNEL/FREQ.	P/L NUMBER
12 - 60 KHz	141442
24 - 108 KHz	131705
36 - 156 KHz	131706
48 - 204 KHz	141443
60 - 252 KHz	131707
72 - 300 KHz	131708
84 - 360 KHz	141444
96 - 408 KHz	131709
108 - 456 KHz	141445
120 - 504 KHz	141446
132 - 552 KHz	131710
144 - 612 KHz	141447
180 - 756 KHz	141448
192 - 804 KHz	131711
252 - 1052 KHz	131712
312 - 1300 KHz	131713
360 - 1500 KHz	141449
432 - 1796 KHz	131714
612 - 2540 KHz	131715
792 - 3289 KHz	131716
972 - 4028 KHz	131717
1092 - 4892 KHz	131718
1872 - 8120 KHz	131719
1200 - 5600 KHz	159457
1440 - 6500 KHz	159461

NOTES:

1. INSTALL TERMINALS E1 - E6 FROM CIRCUIT SIDE OF BOARD WITH THE LONG END GOING THROUGH THE BOARD.
2. C1 & C4 MAY CONSIST OF 2 LARGE CAPS. - IF A PART WOULD STAND HIGHER THAN L1 & L2, THEY SHOULD BE LAID DOWN.

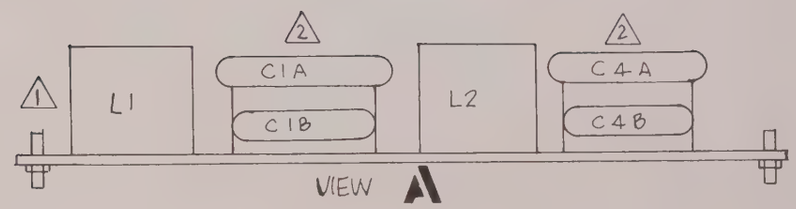

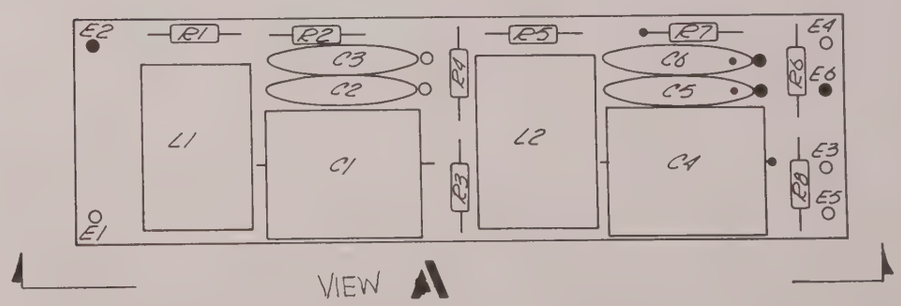

Figure 22-10. De-Emphasis Network Printed Wiring Board Assembly

IMPORTANT NOTE

The information behind this tabbed divider may apply to more than one item. Check all pages carefully.

IMPORTANT NOTE

The information behind this tabbed divider may apply to more than one item. Check all pages carefully.

33R060Z

SECTION 26
RECEIVER ALARM -- PART NO. 131618

26.1 DESCRIPTION

The receiver alarm module is a plug-in unit intended for operation in the Scientific-Atlanta Series 411 Receiver Equipment. Inputs are receiver voltages, 1st and 2nd LO phase-lock status signals, and AGC voltage from the receiver IF amplifier. Outputs are front-panel indications of out-of-tolerance operation of any of the inputs. In addition, fault signals are generated for use by external equipment.

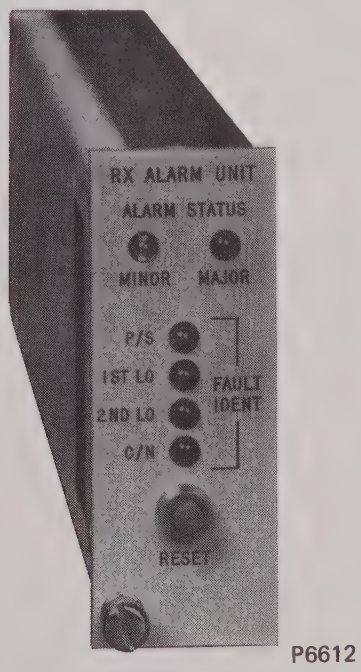

Figure 26-1. Receiver Alarm -- Part No. 131618

26. 1. 1 Technical Characteristics

Characteristic	Specification
Function	Receiver alarm indication and signalling
Receiver Functions Monitored	+24V dc -24V dc -20V dc (downconverter) +12V dc -12V dc 1st LO phase lock (downconverter) 2nd LO phase lock (downconverter) C/N ratio thresholds (high and low)
Voltage Alarm	±15% from nominal value
Phase Lock Alarms	
1st LO Alarm	Upon loss of -20V dc from 1st LO in downconverter
2nd LO Alarm	Upon receipt of phase-lock-loop search signal from 2nd LO in downconverter (typically 18-volt p-p sawtooth waveform)
C/N Alarm, Minor	Alarm at C/N ratio just above signal-degradation level (adjustable)
C/N Alarm, Major	Alarm at C/N ratio below that of minor-alarm level (adjustable)
Outputs	
Minor Alarm	Relay contact closure
Major Alarm	Relay contact closure and open NPN transistor collector (clamped to ground in no-alarm condition)
Inputs	
Receiver Voltage	+24V dc and -24V dc at 10 mA (sense only) +12V dc and -12V dc at 200 mA -20V dc at 10 mA (sense only)
1st LO	-20V dc at 2 mA from downconverter
2nd LO	Phase-lock search signal, 60-Hz, 18V p-p sawtooth
C/N	AGC voltage, -2. 5V dc at maximum C/N ratio, 10 dB/V gradient, 0V at noise.

26. 1. 2 Construction

The active circuits of the alarm module are contained on a single board attached to the inside of the left cover of the module. Operating controls and indicators are on the front panel.

26. 1. 3 Circuit Description

The receiver alarm module senses five dc voltages from the receiver power supply, first and second LO phase lock status from the downconverter, and receiver AGC from the IF amplifier. When any one, or all, of these develops a fault, or an out-of-tolerance condition, a receiver alarm is signalled and relay closures and alarm signals are sent to other units. There are two levels of alarms, minor and major. When the receiver carrier-to-noise ratio drops below a preset threshold (nominally 3 dB blow the normal C/N ratio), a MINOR alarm is signalled. This is the only minor alarm displayed. If the carrier-to-noise ratio were to drop below a second preset threshold (nominally 5 to 6 dB below the first threshold), then then the module would signal a C/N fault-MAJOR alarm. All other faults are considered to be major:

a. C/N ratio 8-9 dB below normal C/N ratio (nominal)

b. Power-supply fault (voltage deviation from normal)

c. 1st LO phase-lock loss

d. 2nd LO phase-lock loss

26. 1. 3. 1 Power-Supply Fault Detection. The five receiver power-supply voltages are applied to the alarm module through the module connector pins as follows (see figure 26-2):

Voltage	Pin
+12V	W
-12V	X
-20V	E
+24V	S
-24V	R

Power to operate the alarm module is taken from the +12V and -12V supplies. A +5V level for operating the logic circuits is obtained from shunt zener CR7 from the +12V supply through R13.

Out-of-tolerance voltage is sensed by one of two circuits, Q1 or Q2 and Q3. For example, the +12V and -12V are connected to resistors R1 and R2. The junction of R1 and R2 is connected through CR1 to Q1. When both the +12V and -12V supplies are operating within acceptable limits, the voltage with respect to ground at the base of Q1 is zero, and Q1 is cut off. If the -12V supply should drop, that is, go more positive, the zero balance at the junction of R1 and R2 would be upset, the junction would go positive, and Q1 would conduct. Its collector, and the "set" line to U4 (pin 10) would drop, signifying a fault.

A negative change, that is, one that would occur if the +12V supply were to go more negative, would be sensed by Q2 and Q3. The two supplies are connected to R3 and R4, with the junction of R3 and R4 connected through CR2 to the base of Q2. The values of R3 and R4 are such that with R16, Q2 is biased into saturation thereby cutting off Q3. The collector of Q3 is then high. A negative-going departure from normal at the base of Q2 would therefore turn off Q2. Transistor Q3 is then turned on by base drive being supplied by R17 to +12V, and its collector, connected to pin 10 of U4, would drop, signifying a fault.

A negative-going signal at pin 10 of flip-flop U4 sets the flip-flop, pin 9 goes positive, Q10 is saturated, and P/S indicator CR102 is lit. The P/S indicator

will remain lit until the flip-flop is reset with RESET switch S101, or until power is removed.

The +24V, -24V, and -20V supplies are connected in a similar manner.

26.1.3.2 1st LO Fault Detection. A fault in the downconverter 1st LO is detected by sensing a signal from the 1st LO phase-lock circuit. If the 1st LO is phase-locked, -20V dc is placed on pin H of the alarm module and Q4 is biased off. If phase lock is lost, pin H goes to about 0V and Q4 is driven into saturation by R19, its collector drops, flip-flop U3 (pin 10) is set, and 1ST LO indicator CR103 is lit. The 1ST LO indicator will remain lit until the flip-flop is reset with RESET switch S101, or until power is removed.

26.1.3.3 2nd LO Fault Detection. A fault in the downconverter 2nd LO is detected by sensing the search signal from the 2nd LO phase-lock circuit. If the 2nd LO is phase-locked, a constant dc level present is at pin J of the alarm module and Q5 is biased off. If phase lock is lost, a sawtooth signal is placed on pin J by the downconverter. This signal is rectified and filtered by CR9, R22, and C3 and overcomes the reverse bias through R23 to turn on Q5. The collector of Q5 drops, flip-flop U3 (pin 4) is set, and 2ND LO indicator CR104 is lit. The 2ND LO indicator will remain lit until the flip-flop is reset with RESET switch S101, or until power is removed.

26.1.3.4 C/N Fault Detection. The alarm module uses the AGC voltage from the receiver IF module as an indication of carrier level. With a maximum carrier-to-noise (C/N) ratio of 25 dB, the voltage on pin F of the alarm module is -2.5V dc, and is 0V when the C/N ratio is 0. This voltage is applied to two operational amplifiers, U1A and U1B, which are operated as voltage comparators. The threshold, or switch, level of the comparators is set by R29 and R35.

At a maximum C/N ratio, the output from both comparators is low. Transistor Q6 is conducting and holding in relay K1 and the MINOR indicator (CR101) is out. Transistor Q7 is biased off.

As the C/N ratio drops, the voltage to the comparators begins to rise towards 0V. At a preset threshold (nominally about 3 dB below the normal C/N ratio), comparator U1A switches and its ouput goes high. Transistor Q6 cuts off, relay K1 drops out, and MINOR indicator CR101 lights. A second contact on K1 provides a closure between pins T and V of the alarm module. If the C/N ratio were to increase, the comparator would switch back to its original state and the MINOR indicator would go out.

If, however, the C/N ratio were to continue to drop below a second preset threshold (nominally 8-9 dB below the normal C/N ratio), the second comparator (U1B) would switch and turn on transistor Q7 signifying a major fault (see paragraph 26. 1. 3. 5). As the collector of Q7 drops, flip-flop U4 (pin 4) will be set and C/N indicator CR105 will light. The C/N indicator will remain lit until the flip-flop is reset with RESET switch S101, or until power is removed.

26. 1. 3. 5 MAJOR Fault Indication. Any one of the major faults, defined in paragraph 26. 1. 3, will signal a MAJOR indication on the alarm module. The "set" line of each of the flip-flops associated with these faults is "AND'ed" in U2A, whose output at pin 6 is connected to relay driver Q8. When there is no major fault, pin 6 of U2 is low, Q8 is biased on, and relay K2 is pulled in. MAJOR indicator CR106 is not lit. When any of the four "set" lines goes low, U2A pin 6 goes high, Q8 is cut off, K2 drops out, and MAJOR indicator CR106 lights. A second contact on K2 provides a closure between pins N and P of the alarm module.

If the fault clears itself, the MAJOR indicator will go out, but the fault that was responsible for the major alarm will still be displayed.

An open-collector line is connected to pin L of the alarm module. During normal operation, transistor Q9 is saturated and pin L is at ground. During a MAJOR indication, Q9 is cut off and pin L is floating. Pin L is normally connected to the baseband switch module, which uses the voltage on this pin to initiate the baseband-switching process.

26. 1. 3. 6 Reset Circuits. Two reset circuits are used to reset the four flip-flops associated with the P/S, 1ST LO, 2ND LO, and C/N indicators. RESET switch S101 places a logic low (ground) on the reset (R) lines of the flip-flops to manually reset the alarms after a fault.

Transistors Q14, Q15, and associated components reset the flip-flops when power is first applied. Capacitor C15, which is initially discharged, holds Q14 on when +12V dc is first applied. This saturates Q15 and pulls the reset line to ground. Capacitor C15 eventually becomes charged through R52 and Q14 is cut off, which cuts off Q15 allowing the reset line to rise to +5V through R55.

26. 1. 3. 7 External Alarm Reporting. In addition to front-panel fault indications, the alarm module provides three signals for use by external circuits:

Fault/Alarm	Pin	Condition at Fault
C/N - MINOR	T and V	Relay contact closure
All - MAJOR	N and P	Relay contact closure
All - MAJOR	L	Open collector of NPN transistor; otherwise clamped to ground

26. 1. 4 Controls and Operation

Figure 26-1 shows the front panel of the receiver alarm module. The only control present is the RESET pushbutton, which is used to reset the alarm circuits after a fault has been cleared. The six LED indicators light to show where the fault occurred and whether it was a minor or major fault.

The four FAULT IDENT indicators will remain lit if the fault clears itself. The MINOR and MAJOR indicators, however, will stay lit only as long as the fault condition exists.

26.2 MAINTENANCE

Refer to section 5 of this instruction manual for general maintenance information. Use a module extender to operate the alarm module from its normal position during maintenance and adjustment.

It is not anticipated that any field adjustment will be required, except perhaps to change the factory-set levels of the C/N MINOR and MAJOR alarm levels.

26.2.1 Access to Circuit Board

a. Remove the right cover by removing the four flat-head screws from the top and bottom edges of the cover, and the three flat-head screws from each end.

b. If it is necessary to gain access to the circuit side of the PC board, remove the six screws in the left cover that hold the board to the cover. The wires are long enough to permit the board to be folded over, away from the cover.

26.2.2 Access to LED Indicators

The front-panel LED indicators are mounted on a small printed-wiring board behind the panel.

a. Remove both covers by taking out all the flat-head screws along the top and bottom edges of the covers and the screws at each end. It is not necessary to remove the six smaller flat-head screws in the left cover.

b. Carefully remove the right cover and fold the left cover down to gain access to the four small screws that hold the LED board to the front panel.

c. Take out these screws and carefully pull the board straight back.

26. 2. 3 Test Equipment Required

The following items of test equipment will be necessary for the adjustment and performance testing of the receiver alarm module.

Item	Description
Module extender	S-A part no. 131889
Voltmeter	20k ohms/V dc sensitivity, 3V dc max scale
RF Signal Generator	HP 8616 or equal
Tuning tool	
Voltage Sources	
Operating	+24V dc, -24V dc at 10 mA +12V dc, -12V dc at 200 mA -20V dc at 10 mA
AGC Simulation*	0 to -3V dc, variable

*See text for requirements.

In addition, for performance testing, an operating Series 411 Receiver must be available. See paragraph 26. 2. 5.

26. 2. 4 C/N Ratio Threshold Adjustment

C/N switching-threshold adjustments will most easily be made with the alarm module installed in an operating receiver. A module extender is required for this. The switch points can be set with a voltmeter, however, if a carrier is not available. If the alarm module is to be adjusted on the bench, that is without a receiver, operating voltages must be furnished as shown on figure 26-2. In either of the two latter cases above (no variable carrier level available), a dc source variable from 0 to -3V dc must also be furnished. Two series-connected D-cells would be satisfactory.

The alarm module reports two levels of C/N ratio alarm, minor and major. The minor alarm is reported when the C/N ratio drops to some level at which program material is not seriously degraded, but below which degradation would be imminent. The major alarm is reported at the minimum acceptable link-noise performance level. Factory settings of these levels are:

Alarm	C/N Ratio
Minor	3 dB below normal C/N ratio
Major	8-9 dB below normal C/N ratio

Use the following steps to re-adjust these levels if necessary.

a. Remove power from the receiver and connect the alarm module through a module extender to the receiver. If a receiver is not being used, connect the alarm module to the voltages shown on figure 26-2.

CAUTION

Do not apply power until all operating voltage connections have been made.

b. If a receiver is not available, or if a variable carrier level is not available, connect a variable 0- to -3V-dc source between pin F of the module and ground. This point is most easily accessible at the junction of R26 and R33, two 6.8K, 1/4W resistors near operational amplifier U1 (see figure 26-2). Connect the positive side of the source to ground.

c. If an operating receiver is not available, connect a jumper between pins E and H. This will apply -20V dc to the 1st LO fault detector to hold it off. Otherwise a MAJOR fault will be displayed, and the C/N fault cannot be adjusted.

d. Apply power to the module (receiver). If all voltages are correctly applied, there should be no indicators lit, except perhaps for the C/N, MINOR, or MAJOR indicators.

e. Set the -3V dc source for -3V at pin F, or adjust the receiver for a maximum C/N ratio.

f. Press the RESET switch. All lights should now be out.

g. Use the relationship of 10 dB C/N ratio per dc volt at pin F to determine the first switching threshold and set the AGC-simulation source for a voltmeter reading at pin F of this voltage. If the module is being adjusted in an operating receiver, reduce the carrier level to the desired first C/N ratio threshold.

h. Turn R29 and R35 (see figure 26-2) fully counterclockwise. The C/N, MINOR, and MAJOR indicators should be out. If not, press the RESET button.

i. Slowly rotate R29 clockwise until the MINOR indicator lights. Check the setting by increasing the AGC voltage at pin F to maximum (about -2. 5V) then reducing it slowly. The MINOR indicator should light at the desired first C/N ratio threshold. Readjust R29 if necessary. Note that there is some hysteresis in the comparator, so the threshold setting should always be approached in the same direction, that is, by turning R29 clockwise.

j. Reduce the AGC voltage at pin F to the second C/N ratio threshold. The MINOR indicator will be lit.

k. Slowly rotate R35 clockwise until the C/N and MAJOR indicators light. At this setting, increase the AGC voltage at pin F to maximum (about -2. 5V) and press the RESET button. All indicators should be out. Decrease the AGC voltage at pin F toward zero slowly while observing the indicators. The MINOR indicator will light at the first C/N ratio threshold and the C/N and MAJOR indicators at the second C/N ratio threshold. Readjust R35 if necessary. Note that there is some hysteresis in the comparator, so the threshold level should always be approached in the same direction, that is, by turning R35 clockwise.

This completes the alarm module adjustments. Replace the cover and re-install the module.

26.2.5 Receiver Alarm Performance Test

Scientific-Atlanta Test Procedure 132325 is included on the following pages and can be used to verify correct performance of the receiver alarm module.

26.3 REPLACEMENT PARTS

Pages 26-13 through 26-17 contain descriptive information on those parts that are considered replaceable in the receiver alarm module. Refer to section 6 in this instruction manual for further information.

APPLICATION		REVISIONS			
NEXT ASSY	USED ON	SYM	DESCRIPTION	DATE	APPROVED

REV																									
SHEET																									
REV STATUS	REV																								
OF SHEETS	SHEET	1	2	3	4	5	6	7																	

ALL DIMENSIONS ARE IN INCHES UNLESS OTHERWISE SPECIFIED

TOLERANCES
3 PLACE DECIMALS ±.005
2 PLACE DECIMALS ±.02
1 PLACE DECIMAL ±.1

FRACTIONS ± ANGLES ±0°30'

MAX SURFACE ROUGHNESS 125 ALL MACHINED SURFACES EXCEPT AS NOTED

BREAK SHARP EDGES AND CORNERS .010 MAX

FINISH

CONTRACT NO.

DWN T. Simonds 8/14/74

ENGR

CHK S. Woodard 8/14/74

PROD

APVD

APVD

SCIENTIFIC-ATLANTA, INC.

3845 PLEASANTDALE RD., DORAVILLE, GA 30340 BOX 13654, ATLANTA, GA 30324

TEST PROCEDURE
RECEIVER ALARM P/N 131618

SIZE	CODE IDENT NO.	DRAWING NO.
A	10110	132325

SCALE	REV	SHEET
		1 of 7

1.0 GENERAL

The purpose of this procedure is to accomplish the adjustment and overall performance testing of the RX Alarm Unit, Part No. 131618.

2.0 TEST EQUIPMENT REQUIRED

The following equipment, or equivalent, is required:

a. Test fixture or test wiring harness (see figure 1) with power supplies to provide simultaneous voltages of ±12V, ±24V, -20V, and 12.6V, 60 Hz.

b. Voltmeter, Digital, Data Precision 3500 or equal.

c. VOM (if test wiring harness is used).

3.0 ADJUSTMENT AND TEST PROCEDURE

3.1 Preliminary Checks and Adjustments

a. Connect the alarm unit to the test fixture or test wiring harness.

b. Adjust alarm unit potentiometers R29 and R35 to center position.

c. Adjust test fixture AGC voltage potentiometer fully CW.

d. Apply power to the test fixture or to all power supplies used with the test harness.

e. Adjust the level of each dc voltage to be within ±0.5V of the desired level.

f. Press the RESET button on the alarm unit front panel. All LED indicators should go out. If this is accomplished, continue on with the test procedure. If not, a circuit failure is indicated and should be corrected before continuing.

3.2 Power Supply Alarm Limits

a. The power supply (P/S) alarm circuits monitor overvoltage and undervoltage power-supply outputs. These circuits are tested by increasing and decreasing each supply voltage to determine the upper and lower alarm limits for each voltage.

b. Slowly increase the +12V supply voltage until the P/S and MAJOR ALARM indicators come on. Record this voltage for the upper limit.

c. Decrease the +12V supply voltage until the MAJOR ALARM indicator goes out. The P/S indicator should remain on. Continue decreasing the voltage until the MAJOR ALARM indicator comes on. Record this voltage for the lower limit.

d. Return the +12V supply voltage to its initial setting (+12 ±0.5V). The MAJOR ALARM indicator should be off. Press the RESET button. The P/S indicator should go out.

e. Use the procedure described above to determine the P/S alarm limits for the remaining supply voltages.

3.3 1st LO Alarm Operation

a. Press and hold the test fixture 1st LO FAULT button. The 1st LO and MAJOR ALARM indicators should come on.

b. Release the 1st LO FAULT button. The MAJOR ALARM indicator should go out and the 1st LO indicator should remain on.

c. Press the alarm RESET button. The 1st LO indicator should go out.

3.4 2nd LO Alarm Operation

a. Press and hold the test fixture 2nd LO FAULT button. The 2nd LO and MAJOR ALARM indicators should come on.

b. Release the 2nd LO FAULT button. The MAJOR ALARM indicator should go out and the 2nd LO indicator should remain on.

3.5 AGC Minor Alarm Adjustment

a. Adjust the test fixture AGC VOLTAGE pot CCW for a voltage of -1.0V dc at TP1 (figure 1).

b. Carefully adjust R29 to the point that trips the MINOR ALARM indication.

c. Turn the AGC VOLTAGE potentiometer CW until the MINOR ALARM indicator goes out. Then turn this potentiometer slowly CCW until the MINOR ALARM indicator comes on. The voltage at TP1 should be -1.0V dc ±.05V dc. It may be necessary to make slight readjustments to R29 in order to accomplish this step.

3.6 AGC Major Alarm Adjustment

a. Adjust the test fixture AGC VOLTAGE potentiometer CCW for a voltage of -0.60V dc at TP1.

b. Carefully adjust R35 to the point that trips the C/N and MAJOR ALARM indicators.

c. Turn the test fixture AGC VOLTAGE potentiometer CW until the MAJOR ALARM indicator goes out. (The C/N indicator should remain on.)

d. Turn the AGC VOLTAGE potentiometer slowly CCW until the MAJOR ALARM indicator comes on. The voltage at TP1 should be -0.6±0.05V dc. Slight readjustments of R35 may be necessary in order to accomplish this step.

3.7 Major and Minor Alarm Contact Closures

a. Adjust the test fixture AGC VOLTAGE potentiometer CCW until the C/N, MINOR ALARM, and MAJOR ALARM indicators are on.

b. Use a VOM to check for continuity between pins N and P (major alarm contacts) and between pins T and V (minor alarm contacts) of connector P101. Both pairs of contacts should be closed.

c. Adjust the AGC VOLTAGE potentiometer fully CW. The MINOR ALARM and MAJOR ALARM indicators should go out and the C/N indicator should remain on.

d. The minor alarm contacts and major alarm contacts should be open at this time.

e. Press the RESET button. The C/N indicator should go out.

3.8 Major Alarm Logic Output

a. Initiate a MAJOR ALARM condition.

b. The voltage at test fixture TP2 (figure 1) should be +12±0.5V dc.

c. Clear the alarm.

d. The voltage at TP2 should be less than +0.5V dc.

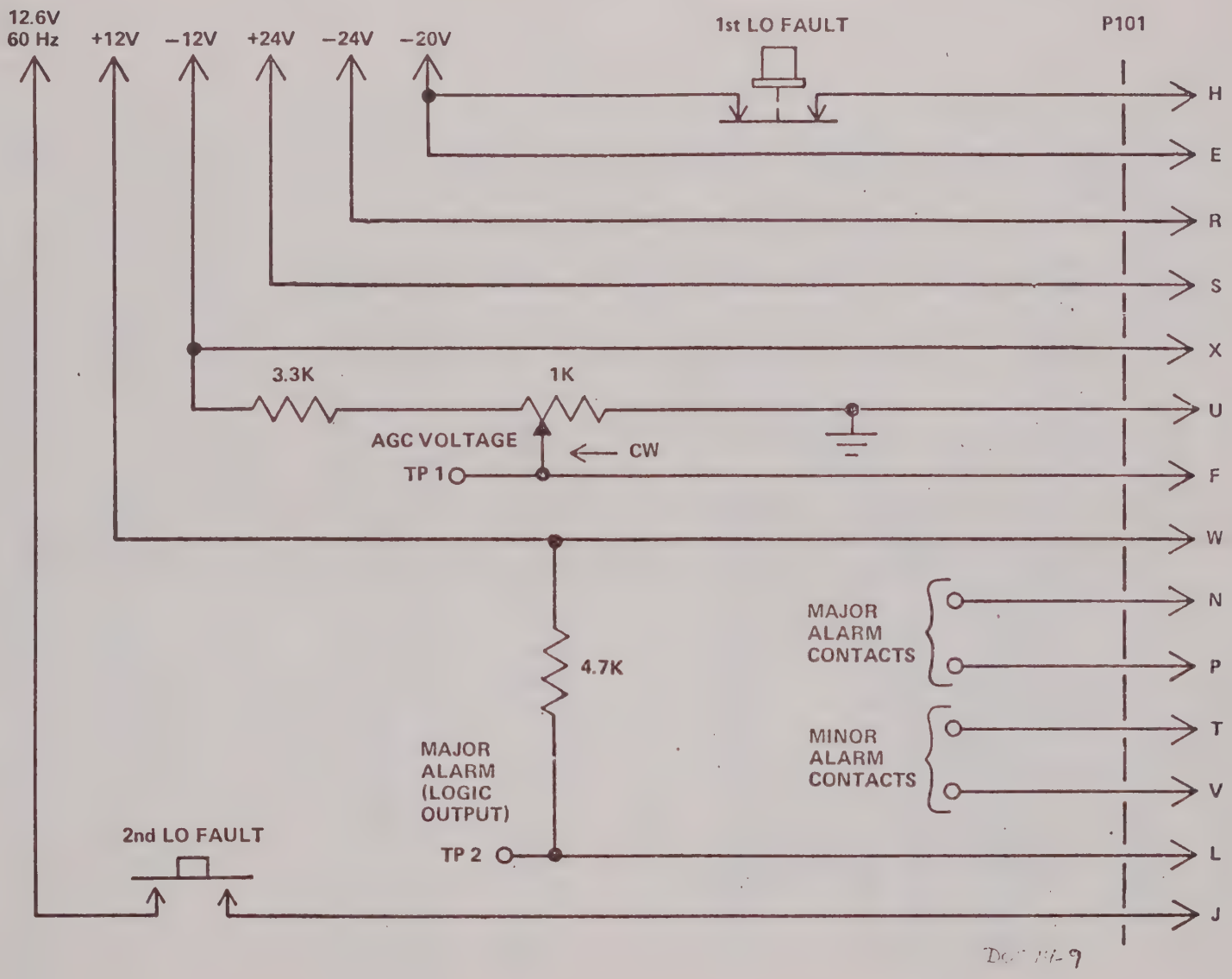

Figure 1. Test Fixture, Receiver Alarm Module

SIZE	CODE IDENT NO.	DRAWING NO.
A	10110	132325

SCALE	REV	SHEET
		6

TEST DATA SHEET

Receive Alarm Module

P/N 131618 S/N _____

Date _____ Technician _____

Approved _____ Date _____

POWER SUPPLY ALARM LIMITS (para. 3.2)

		Upper	Lower
1.	+12V	+16.0> _____ V >+13.0	+11.0> _____ V >+9.0
2.	-12V	-16.0< _____ V< -13.0	-11.0< _____ V < -9.0
3.	+24V	+29.0> _____ V > +25.0	+23.0> _____ V >+18.0
4.	-24V	-29.0< _____ V <-25.0	-23.0< _____ V <-18.0
5.	-20V	-27.0< _____ V <-21.0	-19.0< _____ V <-14.0

1st LO ALARM OPERATION (para. 3.3) _____ CHECKED

2nd LO ALARM OPERATION (para. 3.4) _____ CHECKED

AGC MINOR ALARM (para. 3.5)

Set to trip at an AGC voltage of -1.0 ±0.05V dc.

Initial _____

AGC MAJOR ALARM (para. 3.6)

Set to trip at an AGC voltage of -0.60 ±0.05V dc

Initial _____

MAJOR AND MINOR ALARM CONTACT CLOSURES (para. 3.7)

Major Alarm Contacts _____ CHECKED

Minor Alarm Contacts _____ CHECKED

Alarms Reset _____ CHECKED

MAJOR ALARM LOGIC OUTPUT (para. 3.8)

Low Output Voltage	_____ V dc	< 0.5V dc
High Output Voltage	_____ V dc	12.0 ±0.5V dc

FRONT PANEL ASSEMBLY RX ALARM MODULE--DRAWING NO. 132306

ITEM	COMPONENT	DESCRIPTION	FSCM	MFR PART NUMBER
	0131616	SCHEMATIC DIAGRAM RX ALARM MODULE		
1	0132341	PW BOARD MOUNTING LED		
2	0131696	PANEL FRONT RX ALARM		BY DESCRIPTION
3	0079136	SCREW 2-56 X 1/4 FILL HD,CRSS-REC,SST	09353	A7099
4	0082899	SWITCH NUT 1/4-40 PANEL USE WITH # 82900	09353	7089-3
5	0082898	SWITCH CAP PLASTIC RED USE WITH # 82900	31718	FLV440
CR101	0082036	LAMP LED YEL .190 DIA .180 LNG 2.3V 20MA	31718	FLV240
CR102	0082897	LAMP LED RED .190 DIA .180 LNG 2.1V 10MA	31718	FLV240
CR103	0082897	LAMP LED RED .190 DIA .180 LNG 2.1V 10MA	31718	FLV240
CR104	0082897	LAMP LED RED .190 DIA .180 LNG 2.1V 10MA	31718	FLV240
CR105	0082897	LAMP LED RED .190 DIA .180 LNG 2.1V 10MA	31718	FLV240
CR106	0082897	LAMP LED RED .190 DIA .180 LNG 2.1V 10MA	31718	FLV240
S101	0082900	SWITCH PUSHB SPDT MOM	09353	8121

PW BOARD ASSEMBLY RX ALARM--DRAWING NO. 131617

ITEM	COMPONENT	DESCRIPTION	FSCM	MFR PART NUMBER
	0131616	SCHEMATIC DIAGRAM RX ALARM MODULE		
1	0131828	RX ALARM PRINTED WIRING BOARD		
2	0072879	STANDOFF 2-56 ID 1/8 HT SWAGE CD P BRSS	71279	350-2188-09-07-00
C1	0076697	CAPACITR 2.2 MF 20V SOLID TANT POL 10%	80183	150D225X9020A2
C2	0080139	CAPACITR .1 MF 50V CER MONO	72982	8131-050-651-104Z
C3	0079730	CAPACITR 27 MF 10V SOLID TANT POL 10%	05397	CS13BC276
C4	0080139	CAPACITR .1 MF 50V CER MONO	72982	8131-050-651-104Z
C5	0080139	CAPACITR .1 MF 50V CER MONO	72982	8131-050-651-104Z
C6	0080139	CAPACITR .1 MF 50V CER MONO	72982	8131-050-651-104Z
C7	0070644	CAPACITR 15 MF 20V SOLID TANT POL 20%	80183	CS13BE156K
C8	0080139	CAPACITR .1 MF 50V CER MONO	72982	8131-050-651-104Z
C9	0081210	CAPACITR .01 MF 50V CER MONO X7R 10%	72982	8121-050-X7R-103K
CR1	0071122	DIODE 1N914 SIL 75V 75MA	80368	1N914
CR2	0071122	DIODE 1N914 SIL 75V 75MA	80368	1N914
CR3	0071122	DIODE 1N914 SIL 75V 75MA	80368	1N914
CR4	0071122	DIODE 1N914 SIL 75V 75MA	80368	1N914
CR5	0071122	DIODE 1N914 SIL 75V 75MA	80368	1N914
CR6	0071122	DIODE 1N914 SIL 75V 75MA	80368	1N914
CR7	0076705	DIODE 1N4733A SI ZEN 5.1V 5% 1W	04713	1N4733A
CR8	0071122	DIODE 1N914 SIL 75V 75MA	80368	1N914
CR9	0071122	DIODE 1N914 SIL 75V 75MA	80368	1N914
CR10	0071122	DIODE 1N914 SIL 75V 75MA	80368	1N914
CR11	0071122	DIODE 1N914 SIL 75V 75MA	80368	1N914
CR12	0071122	DIODE 1N914 SIL 75V 75MA	80368	1N914
CR13	0082906	DIODE 1N4157 3 JUNC CONT CONDUCTANCE	24446	1N4157
CR14	0071122	DIODE 1N914 SIL 75V 75MA	80368	1N914
CR15	0071122	DIODE 1N914 SIL 75V 75MA	80368	1N914
K1	0081012	RELAY 12VDC DPDT REED PC MT	24446	3SBV5004C1
K2	0081012	RELAY 12VDC DPDT REED PC MT	24446	3SBV5004C1
Q1	0077147	TRANSSTR 2N3947 NPN SIL	04713	2N3947
Q2	0077147	TRANSSTR 2N3947 NPN SIL	04713	2N3947
Q3	0077147	TRANSSTR 2N3947 NPN SIL	04713	2N3947
Q4	0077147	TRANSSTR 2N3947 NPN SIL	04713	2N3947
Q5	0077147	TRANSSTR 2N3947 NPN SIL	04713	2N3947
Q6	0078851	TRANSSTR 2N2905 PNP SIL	04713	2N2905
Q7	0077147	TRANSSTR 2N3947 NPN SIL	04713	2N3947
Q8	0078851	TRANSSTR 2N2905 PNP SIL	04713	2N2905
Q9	0077147	TRANSSTR 2N3947 NPN SIL	04713	2N3947
Q10	0077147	TRANSSTR 2N3947 NPN SIL	04713	2N3947
Q11	0077147	TRANSSTR 2N3947 NPN SIL	04713	2N3947
Q12	0077147	TRANSSTR 2N3947 NPN SIL	04713	2N3947
Q13	0077147	TRANSSTR 2N3947 NPN SIL	04713	2N3947
Q14	0077148	TRANSSTR 2N3251 PNP SIL	04713	2N3251
Q15	0077147	TRANSSTR 2N3947 NPN SIL	04713	2N3947
R1	0078246	RESISTOR 10.0K OHM RN60C 1% MTL FLM		RN60C1002F
R2	0078246	RESISTOR 10.0K OHM RN60C 1% MTL FLM		RN60C1002F
R3	0078910	RESISTOR 11.5K OHM RN60C 1% MTL FLM		RN60C1152F

PW BOARD ASSEMBLY RX ALARM--DRAWING NO. 131617

ITEM	COMPONENT	DESCRIPTION	FSCM	MFR PART NUMBER
R4	0082129	RESISTOR 12.7K OHM RN60C 1% MTL FLM	[illegible]	RN60C1272F
R5	0078246	RESISTOR 10.0K OHM RN60C 1% MTL FLM	[illegible]	RN60C1002F
R6	0080239	RESISTOR 16.2K OHM RN60C 1% MTL FLM	[illegible]	RN60C1622F
R7	0078246	RESISTOR 10.0K OHM RN60C 1% MTL FLM	[illegible]	RN60C1002F
R8	0078241	RESISTOR 19.6K OHM RN60C 1% MTL FLM	[illegible]	RN60C1962F
R9	0078246	RESISTOR 10.0K OHM RN60C 1% MTL FLM	[illegible]	RN60C1002F
R10	0078246	RESISTOR 10.0K OHM RN60C 1% MTL FLM	[illegible]	RN60C1002F
R11	0078910	RESISTOR 11.5K OHM RN60C 1% MTL FLM	[illegible]	RN60C1152F
R12	0082129	RESISTOR 12.7K OHM RN60C 1% MTL FLM	[illegible]	RN60C1272F
R13	0071890	RESISTOR 100 OHM 1W 10% COMP	01121	RCR32G101KS
R14	0072113	RESISTOR 100K OHM 1/4W 10% COMP	01121	RCR07G104KS
R15	0072002	RESISTOR 4.7K OHM 1/4W 10% COMP	01121	RCR07G472KS
R16	0072113	RESISTOR 100K OHM 1/4W 10% COMP	01121	RCR07G104KS
R17	0072026	RESISTOR 10K OHM 1/4W 10% COMP	01121	RCR07G103KS
R18	0072026	RESISTOR 10K OHM 1/4W 10% COMP	01121	RCR07G103KS
R19	0072026	RESISTOR 10K OHM 1/4W 10% COMP	01121	RCR07G103KS
R20	0072002	RESISTOR 4.7K OHM 1/4W 10% COMP	01121	RCR07G472KS
R21	0072059	RESISTOR 27K OHM 1/4W 10% COMP	01121	RCR07G273KS
R22	0072059	RESISTOR 27K OHM 1/4W 10% COMP	01121	RCR07G273KS
R23	0072189	RESISTOR 1.0 MEG 1/4W 10% COMP	01121	RCR07G105KS
R24	0072002	RESISTOR 4.7K OHM 1/4W 10% COMP	01121	RCR07G472KS
R25	0072002	RESISTOR 4.7K OHM 1/4W 10% COMP	01121	RCR07G472KS
R26	0072014	RESISTOR 6.8K OHM 1/4W 10% COMP	01121	RCR07G682KS
R27	0072176	RESISTOR 680K OHM 1/4W 10% COMP	01121	RCR07G684KS
R28	0072011	RESISTOR 5.6K OHM 1/4W 10% COMP	01121	RCR07G562KS
R29	0077269	POT 2K OHM 1/2W CERMET PC MT 1/4 DIA	73138	62PR2K
R30	0072014	RESISTOR 6.8K OHM 1/4W 10% COMP	01121	RCR07G682KS
R31	0071904	RESISTOR 200 OHM 3W	24681	VAL3
R32	0072019	RESISTOR 8.2K OHM 1/4W 10% COMP	01121	RCR07G822KS

PW BOARD ASSEMBLY RX ALARM--DRAWING NO. 131617

ITEM	COMPONENT	DESCRIPTION	FSCM	MFR PART NUMBER
R33	0072014	RESISTOR 6.8K OHM 1/4W 10% COMP	01121	RCR07G682KS
R34	0072011	RESISTOR 5.6K OHM 1/4W 10% COMP	01121	RCR07G562KS
R35	0077269	POT 2K OHM 1/2W CERMET PC MT 1/4 DIA	73138	62PR2K
R36	0072034	RESISTOR 12K OHM 1/4W 10% COMP	01121	RCR07G123KS
R37	0072176	RESISTOR 680K OHM 1/4W 10% COMP	01121	RCR07G684KS
R38	0072046	RESISTOR 18K OHM 1/4W 10% COMP	01121	RCR07G183KS
R39	0072002	RESISTOR 4.7K OHM 1/4W 10% COMP	01121	RCR07G472KS
R40	0071941	RESISTOR 820 OHM 1/4W 10% COMP	01121	RCR07G821KS
R41	0072014	RESISTOR 6.8K OHM 1/4W 10% COMP	01121	RCR07G682KS
R42	0071927	RESISTOR 470 OHM 1/2W 10% COMP	01121	RCR20G471KS
R43	0071989	RESISTOR 3.3K OHM 1/4W 10% COMP	01121	RCR07G332KS
R44	0071927	RESISTOR 470 OHM 1/2W 10% COMP	01121	RCR20G471KS
R45	0071989	RESISTOR 3.3K OHM 1/4W 10% COMP	01121	RCR07G332KS
R46	0071927	RESISTOR 470 OHM 1/2W 10% COMP	01121	RCR20G471KS
R47	0071989	RESISTOR 3.3K OHM 1/4W 10% COMP	01121	RCR07G332KS
R48	0071927	RESISTOR 470 OHM 1/2W 10% COMP	01121	RCR20G471KS
R49	0071989	RESISTOR 3.3K OHM 1/4W 10% COMP	01121	RCR07G332KS
R50	0071927	RESISTOR 470 OHM 1/2W 10% COMP	01121	RCR20G471KS
R51	0071989	RESISTOR 3.3K OHM 1/4W 10% COMP	01121	RCR07G332KS
R52	0072054	RESISTOR 22K OHM 1/4W 10% COMP	01121	RCR07G223KS
R53	0072011	RESISTOR 5.6K OHM 1/4W 10% COMP	01121	RCR07G562KS
R54	0072064	RESISTOR 33K OHM 1/4W 10% COMP	01121	RCR07G333KS
R55	0071977	RESISTOR 2.2K OHM 1/4W 10% COMP	01121	RCR07G222KS
U1	0081840	IC OP AMP 8PIN DIP INT.COMP. DUAL 741C	04713	MC1458P1
U2	0081007	IC TTL DUAL 4-IN POSITIVE NAND BUFFER	04713	MC7440P
U3	0080446	IC TTL DUAL D-TYPE EDGE TRIG FF 7474 EQ	04713	MC7479P
U4	0080446	IC TTL DUAL D-TYPE EDGE TRIG FF 7474 EQ	04713	MC7479P

PARTS LIST

ASSEMBLY 131618 RX ALARM MODULE

ITEM	COMPONENT	DESCRIPTION	MFR	FSCM	MFR PART NUMBER
	0131616	SCHEMATIC DIAGRAM RX ALARM MODULE			
1	0131617	PW BOARD ASSEMBLY RX ALARM			
2	0132306	FRONT PANEL ASSY RX ALARM MODULE			
3	0127195	CHASSIS			
4	0090723	COVER,LOWER DECK MODULE SERIES 400	XZ		BY DESCRIPTION
5	0078985	SCREW 2-56 X 3/16 F HD,100 DEG,SST			
6	0090724	REAR PANEL,SINGLE WIDTH LWR DECK MODULE	BDW	09922	RC24M-9
7	0078535	CONN CONTACT FEMALE CRIMP NO. 24 WIRE	ES	72962	92-1660-40
8	0081155	NUT ESNA 4-40 MINI HEX INSRT BRSS CD PLT	XZ		BY DESCRIPTION
9	0079007	SCREW 4-40 X 1/8 F HD,100 DEG,SST	XZ		PER MS24693-C1
10	0078988	SCREW 4-40 X 3/16 F HD,100 DEG,SST	BDW	09922	MS20PM-61
J1	0078531	CONN RECT BODY W/O CONTACTS 20 POS PLUG			

MANUFACTURER'S CODES

FSCM	Manufacturer
01121	Allen-Bradley Milwaukee, Wisconsin
04713	Motorolo Semiconductor Pdts. Phoenix, Arizona
05397	Kemet Div., Union Carbide Cleveland, Ohio
09353	C & K Components, Inc. Newton, Maine
09922	Burndy Inc. Norwalk, Connecticut
24446	General Electric Schenectady, New York
24681	Memcor Inc. Huntington, Indiana
31718	Fairchild Microwave Pdts. Cleveland, Ohio
72962	Elastic Stop Nut Corporation Union, New Jersey
72982	Erie Resistor Erie, Pennsylvania
73183	Beckman Instrument Fullerton, California
80183	Sprague Products North Adams, Massachusetts
80211	Motorolo Chicago, Illinois
80368	Sylvania Electric New York, New York
91637	Dale Products Columbus, Nebraska

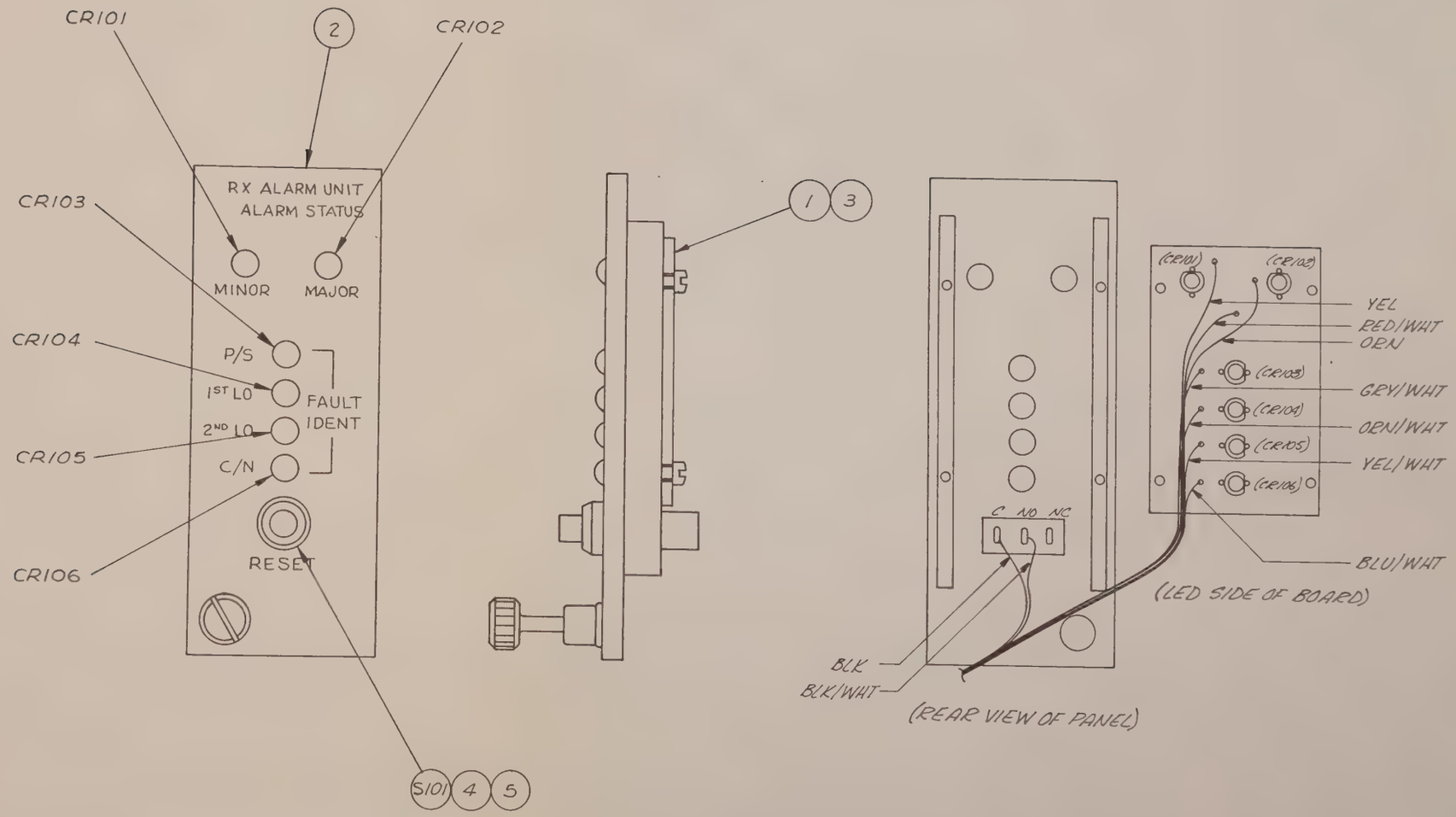

Figure 26-2. RX Alarm Front Panel Assemb

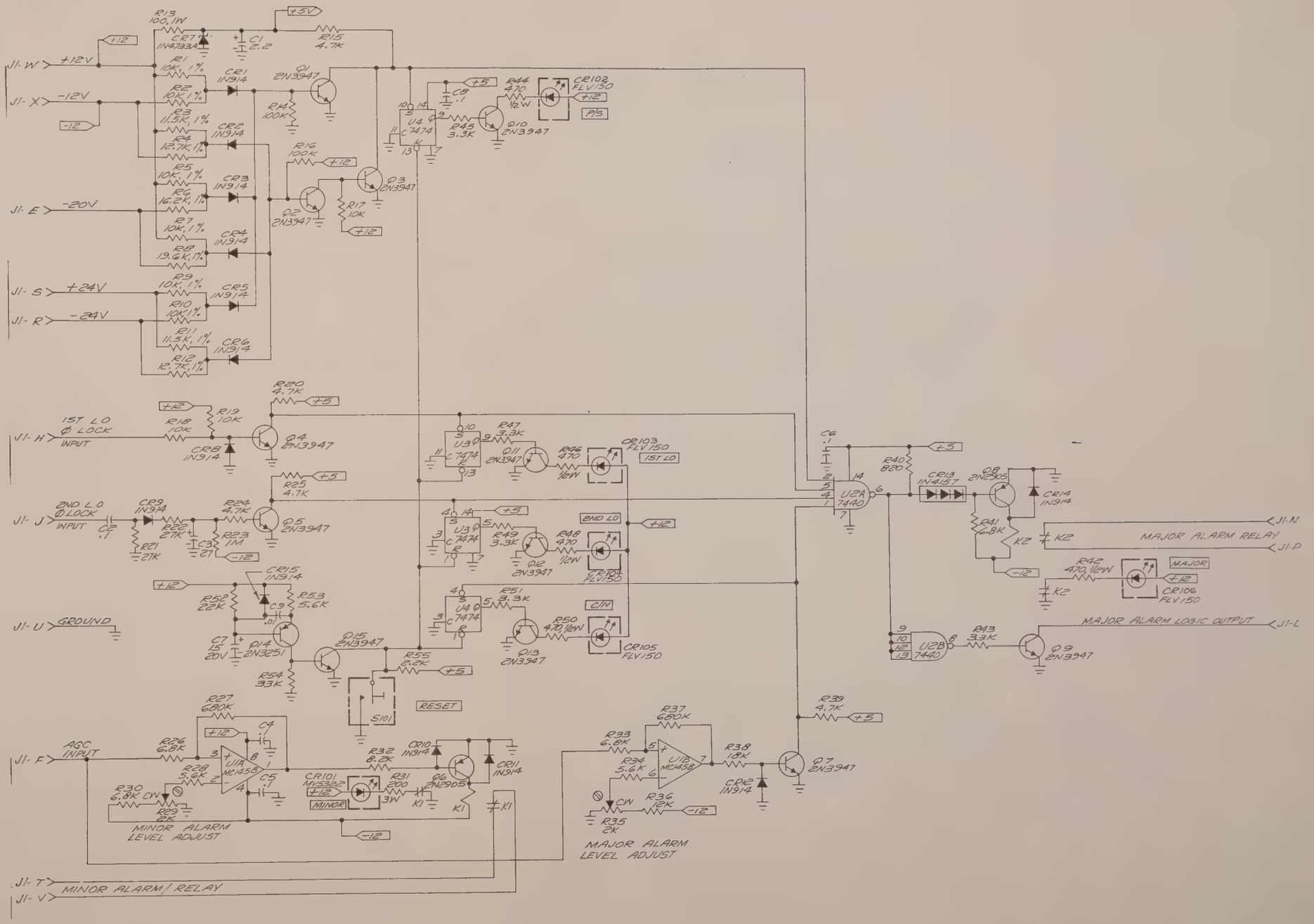

Figure 26-3. RX Alarm Module Schematic Diagram

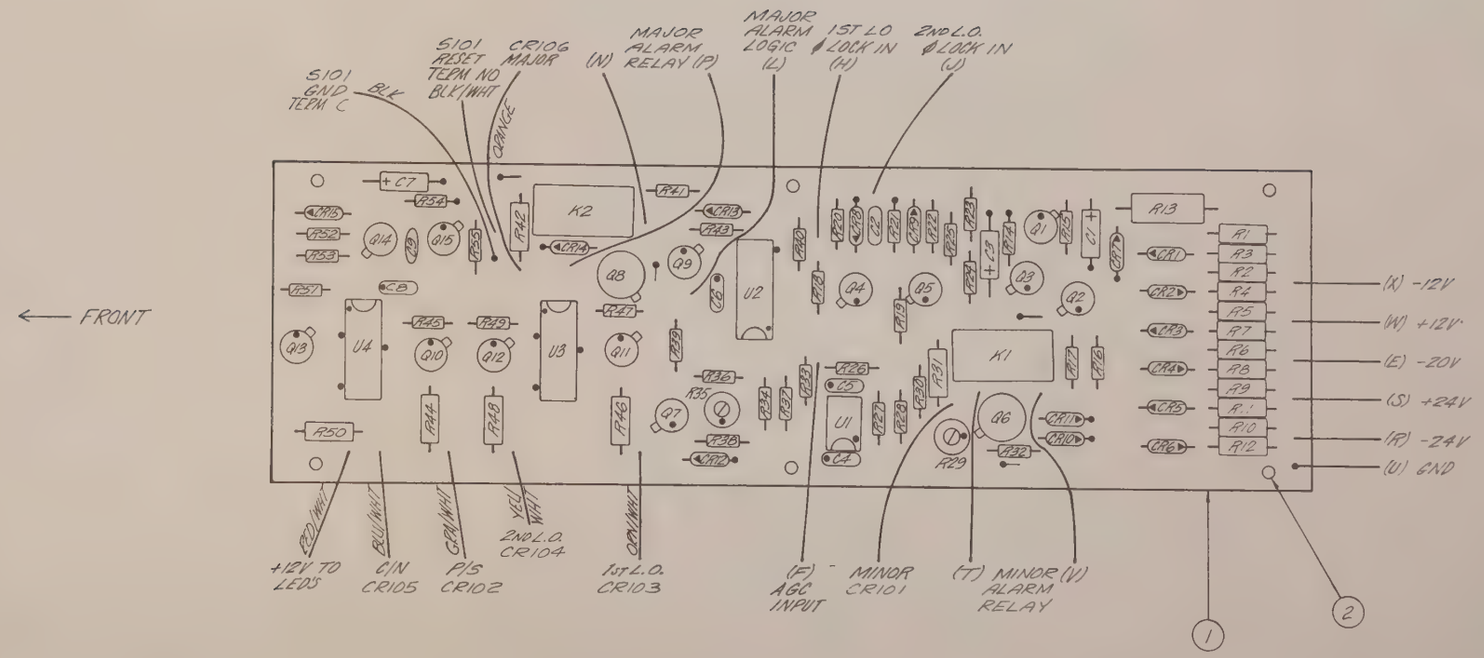

NOTES:

1 CIRCLED NUMBERS REFER TO SEPARATE PARTS LIST

131617

Figure 26-4. RX Alarm Printed Wiring Board Assembly

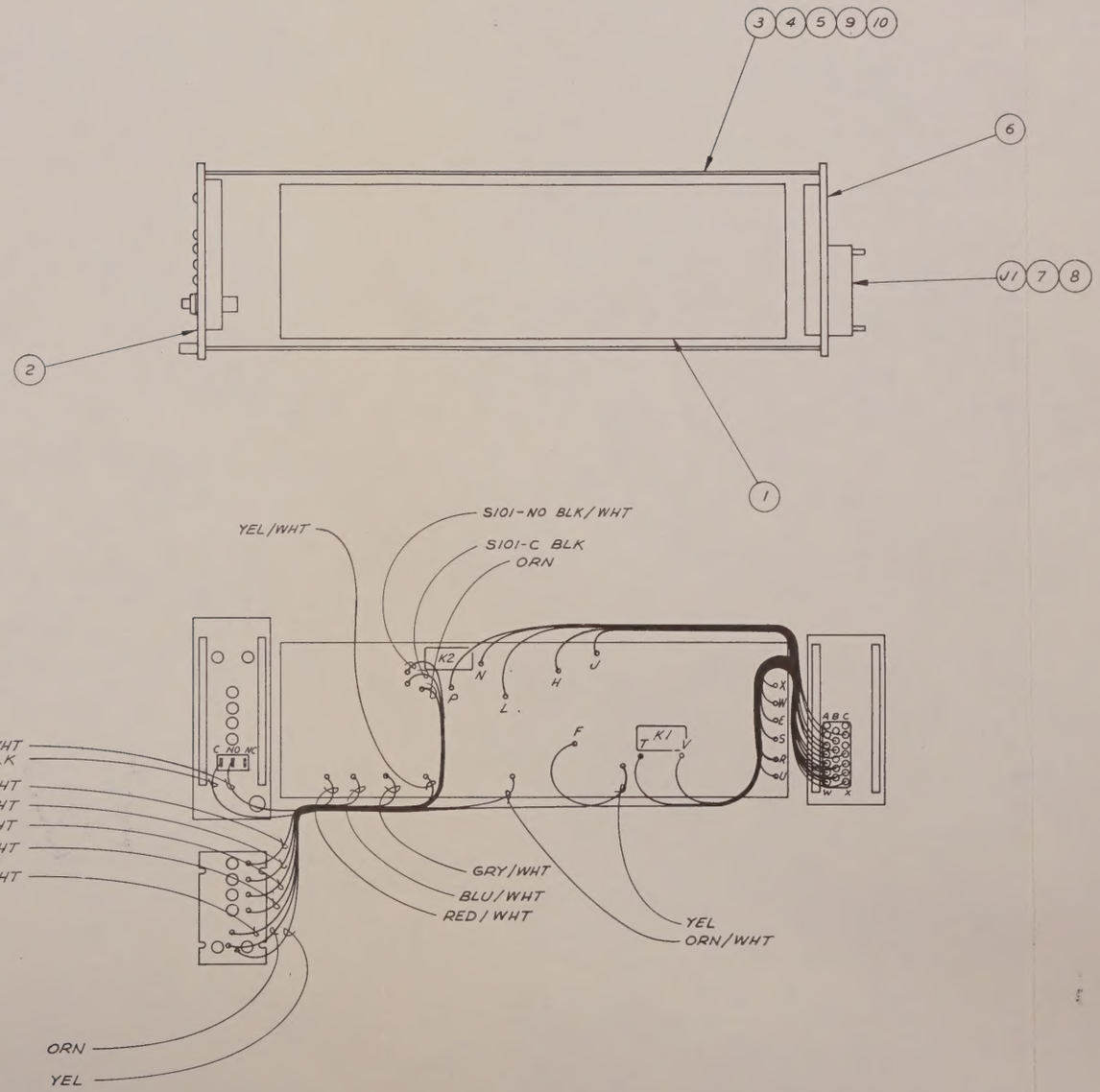

J1 CONNECTOR COLORS

FROM J1 PIN	TO PWB LOCATION	COLOR NO. 24 AWG
E	E	BLUE
F	F	WHITE
H	H	BROWN
J	J	WHT/ORN
L	L	GREEN
N	N	PINK
P	P	ORANGE
R	R	VIOLET
S	S	RED
T	T	WHT/GRN
U	U	BLACK
V	V	WHT/BRN
W	W	WHT/RED
X	X	WHT/VIO

SEE SEPARATE PARTS LIST

131618A

Figure 26-5. RX Alarm Module Assembly

MP MASTER
MA29391